SUBCOURSE
TM0656

EDITION
4

DIESEL-ELECTRIC LOCOMOTIVES

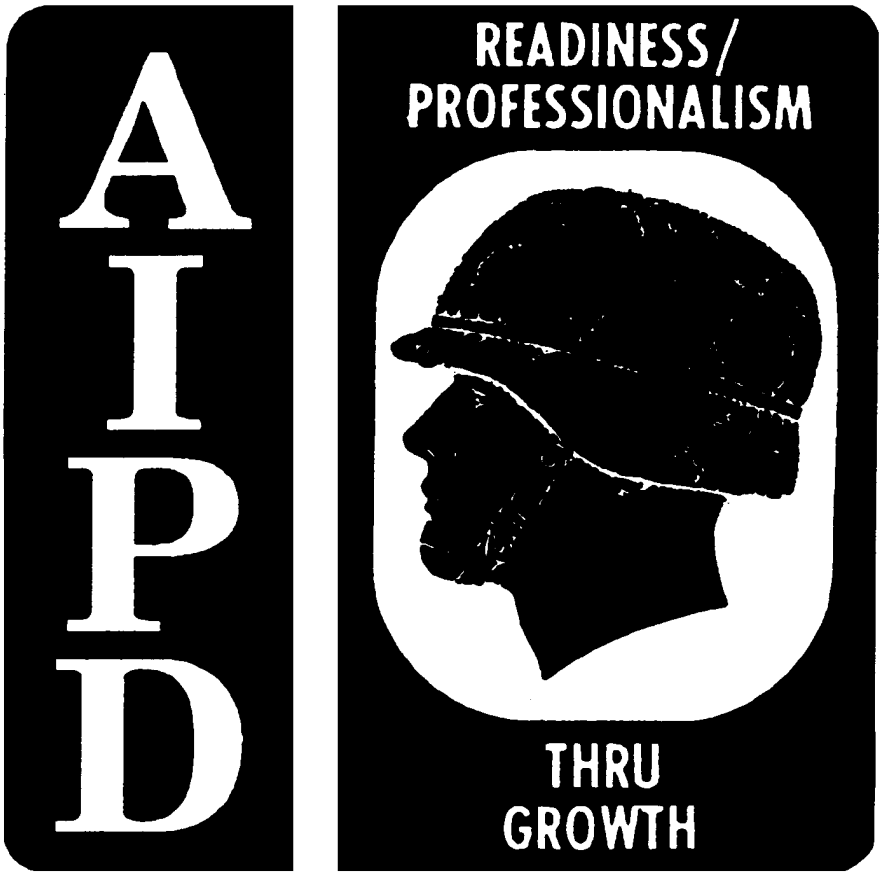

THE ARMY INSTITUTE FOR PROFESSIONAL DEVELOPMENT

ARMY CORRESPONDENCE COURSE PROGRAM

CORRESPONDENCE COURSE OF THE
U. S. ARMY
TRANSPORTATION SCHOOL

DIESEL-ELECTRIC LOCOMOTIVES

LESSON EXERCISES
TRANS SUBCOURSE 656

Supersedes Trans 656, Diesel-Electric Locomotives, November 1969.

TRANS SUBCOURSE 656

DIESEL-ELECTRIC LOCOMOTIVES

INTRODUCTION

An understanding of the structure of a locomotive mechanically and electrically is essential to a person attempting to perform maintenance and repair services on it. The reference text on which this subcourse is based is a broad presentation of locomotive structure and a basic outline of maintenance and repair procedures. Upon completion of the subcourse, you should be able to identify the mechanical parts of a diesel-electric locomotive, to explain how the components of the electric system work, to describe maintenance procedures required to keep the locomotive running properly, and to troubleshoot for various malfunctions. The subcourse consists of four lessons and an examination, divided as follows:

	Credit hours
Lesson 1, Mechanical Structure	1
2, Electric System	2
3, Mechanical Maintenance and Repair	1
4, Electrical Maintenance and Repair; Troubleshooting	2
Examination	2
Total	8

You are not limited as to the number of hours you may spend on the solution of the lessons or the examination. For statistical purposes, you are requested to enter on the answer sheet the number of hours spent on each set of solutions.

Text and materials furnished: Reference Text 656, Diesel-Electric Locomotives, June

Upon completion of this subcourse, retain the reference text and exercise sheets. Do not return them with your answer sheet.

LESSON 1..... Mechanical Structure.

CREDIT HOURS.....1.

TEXT ASSIGNMENT.....Reference Text 656, pars. 1.1-1.13.

MATERIALS REQUIRED.....None.

LESSON OBJECTIVE..... To enable the student to identify the mechanical components of the diesel-electric locomotive, to describe their interrelationship, and to explain how they operate.

SUGGESTIONS..... None.

EXERCISES

Weight		True-False
2	1.	Contamination of oil by corrosive acids is caused by oxidation.
2	2.	The amount of fuel set to enter a cylinder is determined by the available oxygen.
2	3.	Four strokes of the piston rather than two occur in a four-stroke-cycle engine because of a difference in the cylinder block.
2	4.	The part of the fuel system into which the injection nozzle directs fuel is the compression chamber.

Cluster True-False

(Each of the following groups of questions is related to the statement that immediately precedes the group. On the answer sheet, indicate which are true and which false with respect to the statement.)

FIRST GROUP

Consisting of wheels, frames, axles, journals and journal boxes, bolsters, springs, bearings, and brake rigging, a locomotive swivel truck performs the following functions:

Weight

4 5. Controls braking pneumatically.

4 6. Supports the tilting tendency of the locomotive.

4 7. Delivers sand between the wheel and rail.

4 8. Carries the weight of the superstructure.

4 9. Allows the locomotive to turn on curves.

SECOND GROUP

There are various types of airbrake systems; some characteristics are found in all types and others are peculiar to one type only. In:

4 10. All systems, an equalizing reservoir allows reductions in brake pipe pressure.

4 11. The independent system, each rail car is braked separately.

4 12. All systems, a deadman pedal, when pressed, causes brakes to be applied immediately.

4 13. The automatic system, the locomotive's reservoir supplies air to each car.

4 14. The independent and automatic systems, separate levers control each type of brake.

THIRD GROUP

It is true of a diesel-electric locomotive engine that its:

4 15. Generator transmits mechanical action from the pistons to the crankshaft.

4 16. Bedplate supports it and furnishes a housing for the crankshaft.

4 17. Power comes from a charge of fuel being burned inside a cylinder.

Weight

4 18. Cylinders move up and down inside pistons and are connected by connecting rods to the crankshaft.

4 19. Traction motors operate the wheels through mechanical force.

Matching

Match a part from column H to its description in column I.

Items from column II may be used once, more than once, or not at all.

		Column I		Column II
4	20.	Used to cut out parts of a circuit when they are not needed.	A.	Cocks.
			B.	Feed valves.
4	21.	Operated by a gas turbine located in the exhaust system.	C.	Cutout valves.
			D.	Fuel injection pump.
4	22.	Used to maintain a pre-determined air pressure in the brake pipe.	E.	Pressure-charged engine compressor.
4	23.	Likened to a plunger within a barrel.		

Analytical

Using the following key, indicate your reaction to each of the statements.

A. The underscored statement is true, and the reason for it or result of it is true.

B. The underscored statement is true, but the reason or result of it is false.

C. The underscored statement is false.

Weight

4 24. Pressure charging can increase power 50 percent in a four-stroke engine by putting more air and more fuel into the cylinder.

4 25. With independent airbrakes air goes from the locomotive to all cars in the train making the system slower than one with automatic airbrakes.

4 26. Only treated water should be used in the water cooling system because it heats more rapidly than water that is impure.

4 27. An open combustion chamber provides the advantages of small heat loss and low fuel consumption because the entire supply of air is in the cylinder and the combustion space is in the piston crown.

LESSON ASSIGNMENT SHEET

TRANS SUBCOURSE 656.....	Diesel-Electric Locomotives.
LESSON 2.....	Electric System.
CREDIT HOURS.....	2.
TEXT ASSIGNMENT.....	Reference Text 656, pars. 1.14-1.44.
MATERIALS REQUIRED.....	None.
LESSON OBJECTIVE.....	To enable the student to identify the parts of the electric system of a diesel-electric locomotive and to explain how the electric system works.
SUGGESTIONS.....	None.

EXERCISES

Weight		True-False
2	1.	When one cab controls several locomotives connected together, it is a doubleheaded operation.
2	2.	Reduction of brake pipe pressure opens the pneumatic control switch.
2	3.	In the power control circuits, the energized magnets are located between the control switch and the operating coils.
2	4.	The map used to trace out circuits and locate trouble on diesel-electric locomotives is called a schematic diagram.
2	5.	With dynamic braking, the locomotive's wheels are used to drive the traction motors.

Weight

2 6. In multiple-unit operation, start trailing unit engines and close the ground relays before operations begins.

Cluster True-False

(Each of the following groups of questions is related to the statement that immediately precedes the group. On the answer sheet, indicate which are true and which false with respect to the statement

FIRST GROUP

Most of the parts of a diesel-electric locomotive are electrical. From the following statements, can you identify those which are true or false concerning the electric system?

3 7. Voltmeters are connected to the high voltage side of the line.

3 8. A generator or battery supplies the current.

3 9. Large electrical resistances are measured in millions of ohms, called megohms.

3 10. In Ohm's law, current is represented by "I."

3 11. When the traction motor cutout switch is open, the main power switches are open and the corresponding motors are disconnected from the generator.

SECOND GROUP

A generator creates electricity by cutting the lines of force of a magnet; the following statements about generators are correct or incorrect.

3 12. To change alternating current to direct current, an alternator is used.

3 13. Voltage is higher and current is lower in a lap-wound armature coil than in a wave-round coil.

3 14. Direct-current generators are series-wound, shunt-wound, or compound-wound.

Weight

3 15. Even though the armature's speed of rotation is constant, electromotive force can vary in the coil.

3 16. A generator takes in electrical energy and puts out mechanical energy.

Matching

Match a device from column II with the function describing it in column I.

Choices in column II may be used once, more than once, or not at all.

		Column I		Column II
3	17.	Indicates the maximum time the locomotive may be operated at a certain load.	A.	Exciter.
			B.	Reverser.
3	18.	Supplies the main generator field current.	C.	Main generator.
			D.	Ammeter.
3	19.	Reduces the power output of the generator by reducing its field excitation.	E.	Load regulator.
3	20.	Converts the power output of the diesel engine into electrical power.		
3	21.	Reverses the direction of current in the traction motor field winding.		

Match a locomotive part from column II with its description in column I.

Choices in column II may be used once, more than once, or not at all.

		Column I		Column II
3	22.	Has a rotating drum as its main switching element.	A.	Relay.
			B.	Battery.

Weight

		Column I		Column II
3	23.	Supplies power for the lighting circuits before the engine is started.	C.	Auxiliary generator.
			D.	Control switch.
3	24.	Serves as the master switch for locomotive controls.	E.	Reverser.
3	25.	Is installed in the main power circuit to warn if a ground develops.		
3	26.	Assumes the low-voltage load after the battery has supplied power for starting the engine.		

Match a control device from column II with its description in column I.

Choices from column II may be used once, more than once, or not at all.

		Column I		Column II
3	27.	Ordinarily used with manually controlled transition.	A.	Reverse lever.
			B.	Pneumatic throttle.
3	28.	Prevents undesired forward transition on automatic equipment.	C.	Control switch.
			D.	Transition lever.
			E.	Transition forestalling switch.
3	29.	Is equivalent to a pressure regulating valve.		
3	30.	Connects the control circuits to their source of power.		

Analytical

(Using the following key, indicate in the appropriate space on the answer sheet your reaction to each of the statements.)

Weight

A. The underscored statement is true, and the reason for it or result of it is true.

B. The underscored statement is true, but the reason or result of it is false.

C. The underscored statement is false.

2 31. Fuses and circuit breakers are designed to provide protection against overloads by breaking the circuit before damage occurs.

2 32. The resistance of a parallel circuit is always lower than that of any one of its individual parallel paths because, in a parallel circuit, current from the source divides through two or more parallel paths.

2 33. Transition is a variance of power put out by the generator, since it strengthens the traction motor fields.

2 34. Work is expressed in foot-pounds per second because the element of time is important.

2 35. A dynamo is reversible; therefore it can be operated as either a generator or a motor.

2 36. When fields are reversed, traction motors change their direction of rotation, with the result that the locomotive's direction of travel is changed.

2 37. In a series circuit, current passes through each device in completing its path to the source; therefore, the total resistance of the circuit is equal to half of the resistances in all portions of the circuit.

2 38. In the armature core and field core, currents form eddies that take away excessive heat because outside circuits prevent the heat from building up.

LESSON ASSIGNMENT SHEET

TRANS SUBCOURSE 656.....	Diesel-Electric Locomotives.
LESSON 3.....	Mechanical Maintenance and Repair.
CREDIT HOURS.....	1.
TEXT ASSIGNMENT.....	Reference Text 656, pars. 2.1-2.16.
MATERIALS REQUIRED.....	None.
LESSON OBJECTIVE.....	To enable the student to recognize the things that can go wrong with the mechanical components of a diesel-electric locomotive, to know how to maintain them to avoid major break-down of equipment, and to make minor adjustments and repairs to mechanical equipment.
SUGGESTIONS.....	None.

EXERCISES

Weight		True-False
2	1.	When checking the brakes, do not let an air pocket form between the packing and the piston head.
2	2.	Piston and connecting rod assemblies of locomotives used in road service always require more frequent repair than those used for switching.
2	3.	New packing for a journal box should soak in oil at least 48 hours before use.
2	4.	The felt swab of the piston lubricator in the airbrakes should come in full contact with the cylinder.

Weight

2 5. If air pressure in the air system is unusually low, you should check the low pressure suction and discharge valves.

2 6. Axle bearings should be repacked every 4 months.

2 7. When adjusting the fuel pump, low pressure and high temperature are signs that too much fuel is being injected into the cylinders.

2 8. Sanders should be checked annually to be sure that the vent port remains open.

Cluster True-False

(The following group of questions is related to the statement that immediately precedes the group.

GROUP

Specific measurements, distances, speeds, or pressure are set for efficient operation of parts of the locomotive. The following specifications are those set for parts named:

4 9. The speed of the driven pulley is found by multiplying the inside diameter of one unit by the speed of the other unit, and multiplying the product by the inside diameter of the other unit.

4 10. The air system compressor's condemning limit is about 80 percent of its normal capacity when new.

4 11. Pistons and connecting rods should be removed from inspection at about 75,000 or 85,000 miles.

4 12. Clearance of the connecting rod bearings should be 0.10 inch per inch of crankshaft diameter.

4 13. Wheel mounting pressure is a minimum of 70 and a maximum of 100 tons for steel wheels on a 5 x 9 journal.

Weight

Matching

Match the proper corrective action from column II to remedy each defect in column I

Choices from column II may be used once, more than once, or not at all.

		Column I		Column II
5	14.	Fuel drains into the crank-case lubricating oil.	A.	Correct angular mis-alinement and check the bearings for wear.
5	15.	Airbrake levers, pins, and bushings have worn.	B.	Take up by turnbuckle adjustment.
5	16.	Scales formed in water in the cooling system.	C.	Cut out cylinders in rotation.
			D.	Tighten all the nuts on the injector.
			E.	Flush with a strong alkaline solution and rinse with clear water.

Multiple Choice

(Each question in this group contains one and only one correct answer.

4 17. Angular misalinement refers to:

A. The speed of the driving pulley exceeding the speed of the driven pulley.
B. Two shafts coming together at an angle.
C. A routine check for truck casting.
D. The centers of two shafts failing to coincide.

Weight

4 18. If the air system's intercooler pressure is unusually low, check the operation of the:

A. Low pressure suction and discharge valves.
B. Drain cock located in the bottom header.
C. Finned tubing and header assembly.
D. Intercooler safety valve.

4 19. It may be necessary to flush the lubricating system when replacing:

A. Oil according to appropriate lubrication orders.
B. Mineral oil with a detergent oil.
C. Detergent oil with the same brand and type of detergent oil.
D. Mineral oil with another brand of mineral oil.

4 20. When checking crankshaft bearing wear, the bearing shell is measured with a:

A. Micrometer.
B. Deflection rule.
C. Magnetic tester.
D. Linometer.

4 21. Airbrake adjustment is usually necessary when brake cylinder piston travel of each piston exceeds how many inches?

A. 1.0.
B. 1.5.
C. 1.75.
D. 2.0.

4 22. When the centers of two coupled shafts do not coincide, the defect is known as:

A. Absolute alinement.
B. Flexible displacement.
C. Radial misalinement.
D. Angular misalinement.

Weight Analytical

A. The underscored statement is true, and the reason for it or result of it is true.

B. The underscored statement is true, but the reason or result of it is false.

C. The underscored statement is false.

5 23. Bearings that have been used must be replaced in the same place from which they were taken because a bearing's location determines how it is worn.

5 24. When testing injection nozzles, be sure that spray is directed away from the engine so that oil will not be sprayed into the combustion chambers.

5 25. A water box is usually used to test a repaired engine because it is safer than most other testing devices.

5 26. When testing the fuel pipe injection nozzle, operate the lever slowly so that the pressure will be as high as possible.

5 27. When saturating a waste pad in oil, keep the oil at 40° F or less so that it will coagulate and not drip.

LESSON ASSIGNMENT SHEET

TRANS SUBCOURSE 656.....	Diesel-Electric Locomotives.
LESSON 4.....	Electrical Maintenance and Repair; Troubleshooting.
CREDIT HOURS.....	2.
TEXT ASSIGNMENT.....	Reference Text 656, pars. 2. 17-2.42.
MATERIALS REQUIRED.....	None.
LESSON OBJECTIVE.....	To enable the student to recognize the things that can go wrong in the electric system of a diesel-electric locomotive, to know how to maintain them to avoid major breakdown of electrical equipment, to make minor adjustments and repairs to electric equipment, and to troubleshoot for various malfunctions.
SUGGESTIONS.....	None.

EXERCISES

Weight		True-False
1	1.	In inspecting, cleaning, and repacking generator bearing assemblies, old bearings should be replaced rather than reused.
1	2.	A growler is a device used for testing field coils for short circuits.
1	3.	To clean electric cables and wires, soak them in warm water and wipe them with a clean cloth.

Weight

1 4. Dielectric and resistance tests are made on circuits to detect weaknesses in insulation.

Cluster True-False

(Each of the following groups of questions is related to the statement that immediately precedes the group.

FIRST GROUP

Standard procedures for maintaining motors are to:

2 5. Clean the field windings with a good liquid cleaner and then dry them with compressed air.

2 6. Clean and polish silver contacts if they are blackened.

2 7. Pull pinions at 250,000 miles and inspect armature shaft.

2 8. Paint insulation on the commutator cap with insulating varnish.

2 9. Clean, dip, and bake armature after the specified mileage.

2 10. Oil the contact tips.

SECOND GROUP

Condition of cables and wiring is determined by megger and high potential tests. The following actions are taken in the course of repairing and maintaining exposed sections of wiring:

3 11. Paint cleaned wiring with an insulating paint.

3 12. Clean wires by wiping with rags or using a solvent.

3 13. Locate wires in a cool place to protect the insulation.

3 14. Saturate wires in solvent, then bake to insure that a good coat of solvent remains on the wires.

Weight

3 15. Scrape wires that have deteriorated excessively and clean them with a solvent.

THIRD GROUP

Torque-motor type voltage regulators are checked and maintained by the following actions.

3 16. Insure that the piston does not stick in the dashpot.

3 17. Set the regulator to within 0.8 percent of its operating range.

3 18. Replace the regulator commutator if it shows discoloration.

3 19. Replace burned or worn sector and carbon rim assemblies.

3 20. Clean the regulator whenever sparking develops on the regulator commutator.

Matching

In the next two groups of matching questions, column I lists acceptable maintenance actions performed during regular maintenance, and column I lists the parts receiving these actions. Match a Dart in column II to the applicable action in column I

Items in column II may be used once, more than once, or not at all.

GROUP I

		Column I		Column II
3	21.	If cut, scrape it down to a new surface.	A.	Generator brushes.
			B.	Aliner.
3	22.	Clean by raising and lowering in the holders.	C.	Reverser.
3	23.	Make sure that the voltage regulator is properly adjusted.	D.	Traction motor axle bearing.
3	24.	Test the upper and lower valve seats for leaks.	E.	Battery.

Weight

GROUP II

		Column I		Column II
3	25.	Check contacts for correct alinement, pressure, and wiping action wear.	A.	Shutdown valve.
3	26.	Clean, inspect, and repack roller bearings.	B.	Main power switches.
3	27.	Test for leaks by covering air ports with soapy water.	C.	Motor.
3	28.	Insure that piping connections are tight.	D.	Load regulator.
			E.	Reverser.

Multiple Choice

(Each question in this group contains one and only one correct answer.

3 29. An armature that has been in operation 4 or 5 years should have its coils dipped and baked as a preventive maintenance measure. After cleaning and preheating an armature, dip it for:

A. 2 hours, clean with solvent, and bake 3 hours at 200 degrees Fahrenheit.
B. 2 minutes, drain for 5 minutes, bake 2 hours at 400 degrees Fahrenheit, and spray with fine mist of insulating paint.
C. 6 hours, drain for 2 hours, bake for 4 hours at 300 degrees Fahrenheit, and spray with insulating paint.
D. 5 or 10 minutes, drain for 5 minutes, and place in oven at about 300 degrees Fahrenheit for about 6 hours.

3 30. With the growler test for short circuits in field coils, the ammeter will deflect more than normal if there is:

A. A removable core with a field coil.
B. A short circuit in the field coil.

Weight

C. Primary current bypassing a short circuit.
D. A double circuit connected to the short circuit.

3 31. If the locomotive braking power is too low, the trouble may be a/an:

A. Overcharged brake pipe.
B. Faulty governor.
C. Faulty feed valve.
D. Faulty piston.

3 32. If an engine runs unevenly or vibrates excessively, the trouble may be a:

A. Faulty injector timing.
B. Leaky blower oil seal.
C. Weak battery.
D. Plugged fuel system.

3 33. The minimum recommended megger reading for the power circuit of a traction motor is 1 megohm at _____ degrees Fahrenheit.

A. 37.
B. 50.
C. 77.
D. 85.

3 34. A pinion or axle gear should be condemned when the total working surface of its teeth is chipped or pitted to more than _____ percent.

A. 8.
B. 10.
C. 17.
D. 20.

Weight

A. The underscored statement is true, and the reason for it or result of it is true.

B. The underscored statement is true, but the reason or result is false.

C. The underscored statement is false.

2 35. Generator airgap is measured under the tip of the pole piece because the airgaps under the main poles vary.

2 36. Avoid unneeded dipping and baking of insulation because extra material on the windings increases heat transfer.

2 37. In winter, water should be added to the battery at least 6 hours before the locomotive goes into service, since water that does not mix with the electrolyte will freeze and damage the battery.

2 38. Traction motor axle and pinion gears should not be allowed to operate with torsional vibration because this may shorten the life of armature windings.

2 39. Low insulation resistance is desirable because it indicates high dielectric strength.

2 40. Field windings and leads should be cleaned with a stream of air because they cannot be cleaned sufficiently with a liquid cleaner.

REFERENCE TEXT
656

DIESEL-ELECTRIC LOCOMOTIVES

The information contained herein is provided for instructional purposes only. It reflects the current thought of this school and conforms to printed Department of the Army doctrine as closely as possible. Development and progress render such doctrine continuously subject to change.

U. S. ARMY TRANSPORTATION SCHOOL

Supersedes Reference Text 656, Diesel-Electric Locomotives, November 1969.

CONTENTS

	Paragraph	Page
INTRODUCTION		1
CHAPTER 1. DIESEL-ELECTRIC LOCOMOTIVE CONSTRUCTION	1.1	3
Section I. Mechanical Structure	1.2	3
II. Electric System	1.14	20
CHAPTER 2. MAINTENANCE AND REPAIR	2.1	47
Section I. Mechanical Maintenance and Repair	2.2	48
II. Electrical Maintenance and Repair	2.17	66
III. Troubleshooting	2.33	90
APPENDIX I. REFERENCES		100
II. GLOSSARY		101
INDEX		117

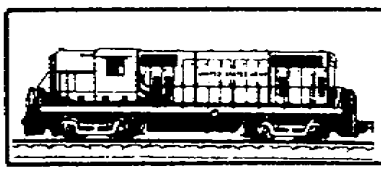

INTRODUCTION

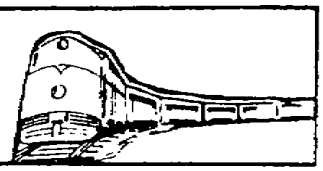

In the 1860's, Alphonse Beau du Rochas suggested several changes in the internal combustion engine to improve its thermal efficiency. One change was to ignite fuel by the heat of compression rather than by a spark. In 1892, Dr. Rudolph Diesel adopted the idea and patented an engine that burned powdered coal ignited by compression. The coal-burning engine didn't develop as Dr. Diesel had hoped; but in 1897 he built another compression-ignition engine--one that burned oil. Although various methods were used to transmit the engine's power to driving wheels, electric drive proved most efficient. Combination of the diesel engine with electric drive is known as the diesel-electric assembly. Applied to a locomotive, the diesel-electric assembly may vary from model to model; but general construction principles are the same in all models.

The first application of the diesel engine to railroad stock is believed to have occurred in Sweden just before World War I. Then, in 1924, the Ingersoll-Rand, General Electric, and American Locomotive Companies built a diesel-electric switching locomotive for the Central Railroad Company of New Jersey. Use of the diesel-electric locomotive spread rapidly as it proved its economy and ease of operation and maintenance. The first completely dieselized railroad was the Birmingham Southern, in 1937. By 1955, diesel-electric locomotives were operating 88 percent of the passenger train miles, 85 percent of the total freight ton miles, and 91 percent of the total switching hours of United States railroads. In 1968, of all the locomotives in this country, 98.5 percent were diesel-electrics.

Military railroad operations are different from civilian operations. In the United States, military locomotives are used only for training and for hauling supplies from a commercial line into an installation. In a theater of operations, however, when the transportation railway service operates a rail system, it uses Army-owned locomotives and those of the local railroads when possible.

This text discusses diesel-electric locomotives. It is divided into two chapters. The first is devoted to construction and the second to maintenance and repair and troubleshooting. Technical terms used are explained in the glossary, appendix II, in the back of

the text. When you have finished studying this text, you should be able to name the components of a diesel-electric locomotive, to explain how they work, to maintain them to keep the locomotive running, and to troubleshoot for various malfunctions.

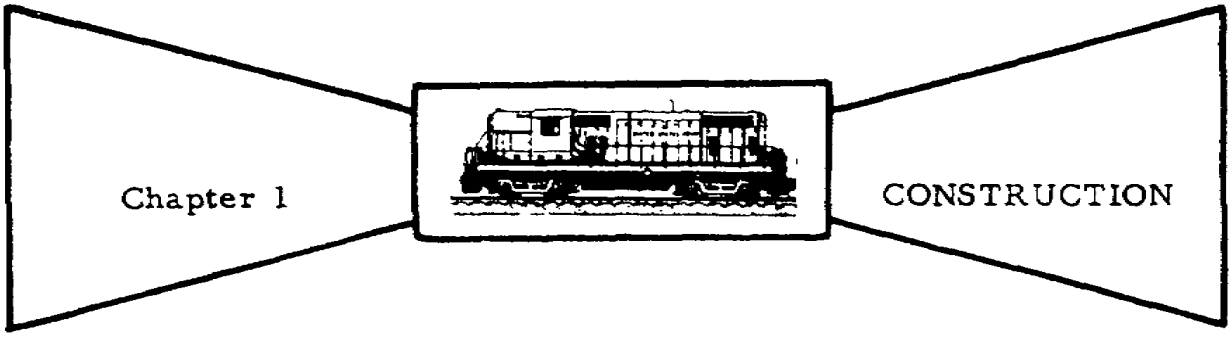

1.1. INTRODUCTION

Understanding what is wrong with a locomotive presupposes a knowledge of locomotive construction. If a repairman knows how the parts of the locomotive work, it is easy for him to discover what is wrong with them; but if he does not, maintenance and repair instructions seem difficult. For this reason, and to introduce some of the terms commonly heard in the repair shop, this chapter contains a simple explanation of mechanical and electric principles applicable to the diesel-electric locomotive. Section I discusses the mechanical construction of the locomotive and section II the fundamentals of the electric system.

Section I. Mechanical Structure

1.2. GENERAL

When fuel is injected into an engine cylinder, heat is required to ignite it. In an automobile engine, high voltage from the battery pushes current through a high resistance set up by the pressure in the combustion chamber and across from one spark plug electrode to the other. The hot spark created ignites the fuel-air mixture. There are other ways, however, to get the heat required for combustion. For example, a diesel engine uses compressed air, which heats as it is compressed.

The two basic designs of diesel engines are the two-stroke-cycle and the four-stroke-cycle. Both work on the same principles, but with variations due to differences in their construction. This section discusses the two designs. It also describes the engine and its components and explains how they operate. It covers the fuel, water cooling, oil, and airbrake systems and the locomotive trucks and accessories. Figure 1.1, a cutaway view, shows the location of the various parts in a typical diesel-electric locomotive.

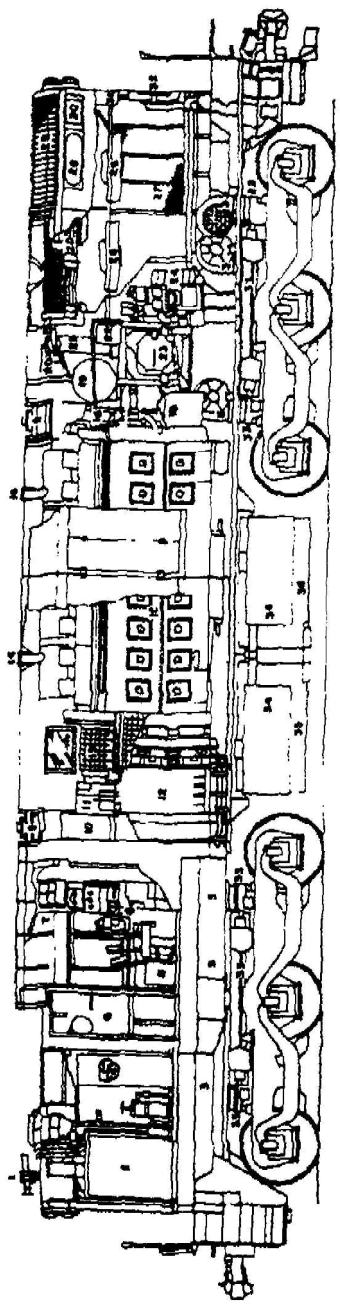

1. HORN
2. STEAM GENERATOR
3. TRACTION MOTOR BLOWER
4. NO.2 HOT WATER HEATER
5. ELECTRICAL CABINET
6. TOOLBOX
7. CAB HEATER
8. ENGINEMAN'S CONTROLS
9. SANDBOX AND FILLER
10. MAIN GENERATOR BLOWER
11. AUXILIARY GENERATOR
12. MAIN GENERATOR & ALTERNATOR
13. ENGINE SCAVENGING AIR BLOWER
14. ENGINE EXHAUST STACK
15. DIESEL ENGINE
16. ENGINE GOVERNOR
17. ENGINE WATER PUMP
18. LUB OIL STRAINERS
19. ENGINE COOLING WATER TANK
20. ENGINE TEMPERATURE SWITCHES
21. LUB OIL COOLER
22. LOAD REGULATOR
23. LUB OIL FILTER
24. AIR COMPRESSOR
25. RADIATOR
26. ENGINE COOLING FAN
27. COOLING FAN AIR INTAKE
28. COOLING FAN SHUTTERS
29. NUMBER BOX
30. CLASSIFICATION LIGHT
31. COOLING FAN CONTACTING PANEL
32. HANDBRAKE
33. TRACTION MOTOR
34. BATTERY BOX
35. FUEL TANK
36. WATER TANK OR EXTRA FUEL TANK

Figure 1.1. Typical Diesel-Electric Locomotive.

1.3. ENGINE

A diesel engine is an internal-combustion, oil-burning engine using compression ignition. Such an engine gets its power from the burning of a charge of fuel within a confined space called a cylinder. Ignition occurs when the fuel is ignited solely by the heat of compression, caused by injecting the fuel into the highly compressed air in the cylinder.

The engine is supported by the bedplate, mounted on the locomotive frame, which serves as a housing for the crankshaft and as a reservoir for the engine lubricating oil. The main structural part of the engine, the cylinder block, is shown in figure 1.2. Between the inner and outer walls of a cylinder is space for a water jacket containing water that helps to cool the engine.

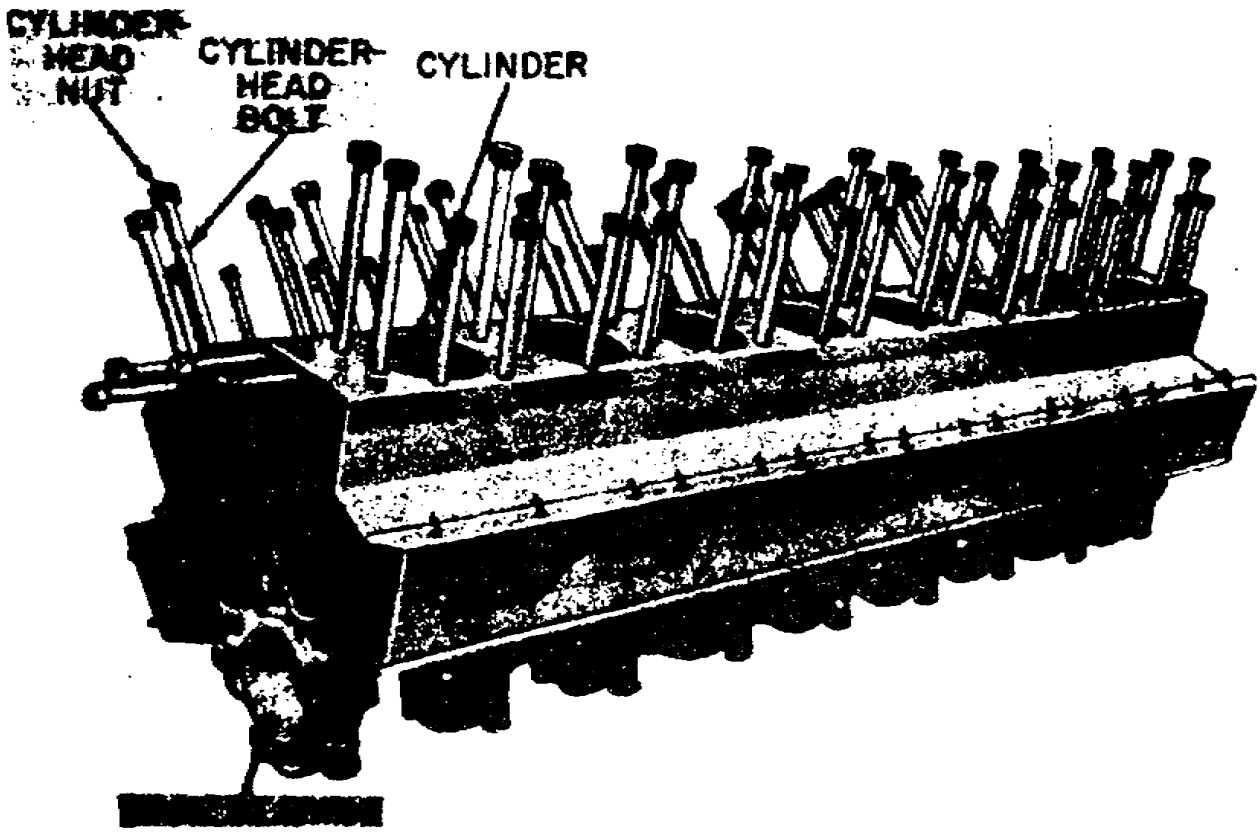

Figure 1.2. Cylinder Block.

All diesel-electric locomotive engines have essentially the same parts and work the same way. The major difference among them is in the arrangement of the cylinders. The three most common cylinder arrangements are the V-type, the vertical in-line, and the horizontal. Figure 1.3 shows parts of a V-type engine, so called because the arrangement forms a "V"; it is used in the most powerful locomotives. The vertical in-line arrangement is used

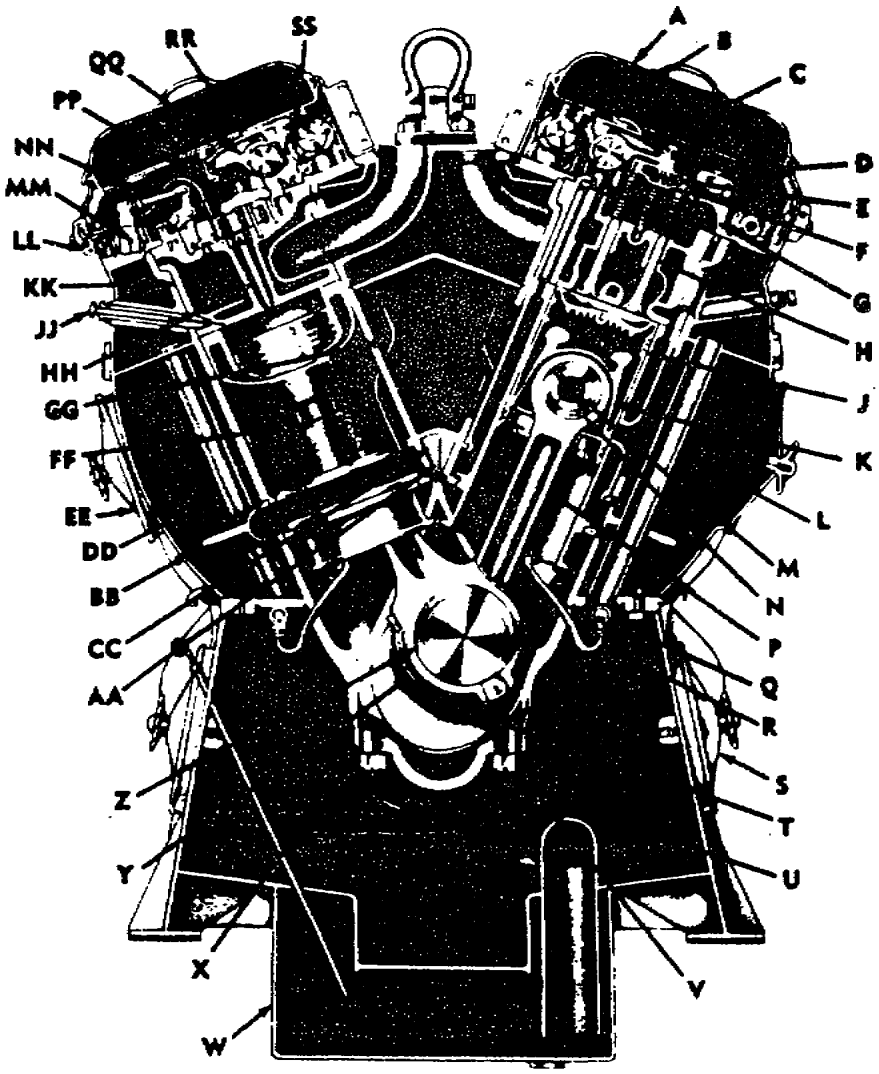

A–CYLINDER-HEAD COVER
B–CAMSHAFT
C–EXHAUST VALVE ROCKER ARM
D–CYLINDER-HEAD CRAB STUD
E–VALVE BRIDGE
F–HYDRAULIC LASH ADJUSTER
G–CYLINDER-HEAD CRAB
H–EXHAUST VALVE
J–PISTON
K–PISTON CARRIER
L–OIL DRAIN TUBE
M–PISTON PIN
N–CONNECTING ROD BUSHING
P–BLADE CONNECTING ROD
Q–PISTON COOLING OIL MANIFOLD
R–PISTON COOLING OIL PIPE
S–OIL PAN HANDHOLE COVER
T–CRANKSHAFT
U–OIL PAN
V–MAIN BEARING STUD
W–OIL PAN SUMP
X–MAIN BEARING CAP
Y–FORK CONNECTING ROD BASKET
Z–CONNECTING ROD BEARING
AA–CRANKSHAFT OIL SUPPLY PASSAGE
BB–WATER MANIFOLD
CC–LUBRICATING OIL MANIFOLD
DD–AIR BOX
EE–AIR BOX HAND-HOLE COVER
FF–CYLINDER LINER
GG–WATER DRAINPIPE
HH–INJECTOR PIPE
JJ–CYLINDER TEST VALVE
KK–CYLINDER HEAD
LL–FUEL OIL MANIFOLD
MM–INJECTOR LAYSHAFT
NN–INJECTOR ADJUSTING LINK
PP–INJECTOR CRAB
QQ–INJECTOR ROCKER ARM
RR–LUBRICATING OIL LINE
SS–OVERSPEED TRIP ROCKER ARM PAWL

Figure 1.3. Cross Section of a V-type Engine.

mostly in low-power engines, and the horizontal arrangement where a very flat, underfloor mounting is desired.

Moving up and down inside the cylinders are pistons, connected by connecting rods to the crankshaft. The crankshaft, shown in figure 1.4, transmits mechanical action from the pistons to drive the generator. The generator changes the mechanical action into electricity and transmits it through cables to the traction motors, which change it through a gear arrangement back into mechanical force to turn the wheels.

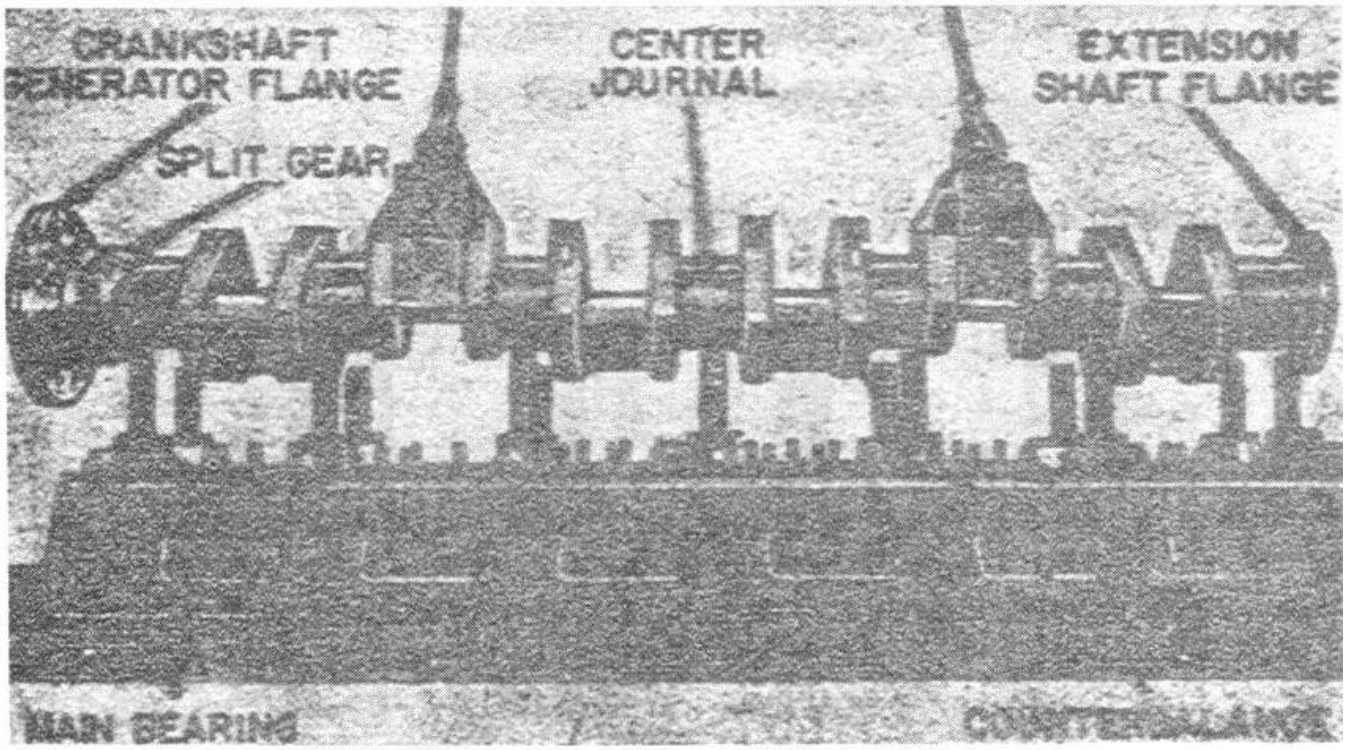

Figure 1.4. Crankshaft.

1.4. ENGINE ACTION

To produce power through an interval of time, a diesel engine must perform a definite series of operations over and over again. This series is known as a cycle in which suction, compression, ignition, and exhaust take place in the order listed. If the engine requires four strokes of the piston and two revolutions of the crankshaft to complete a cycle, it is known as a four-stroke-cycle engine; one completing the cycle in two strokes of the piston and one revolution of the crankshaft is a two-stroke-cycle engine. Figure 1.5 illustrates the operating cycles of the two types of engines.

In the four-stroke-cycle engine, air is drawn into the cylinder through the intake valve as the piston descends on the intake

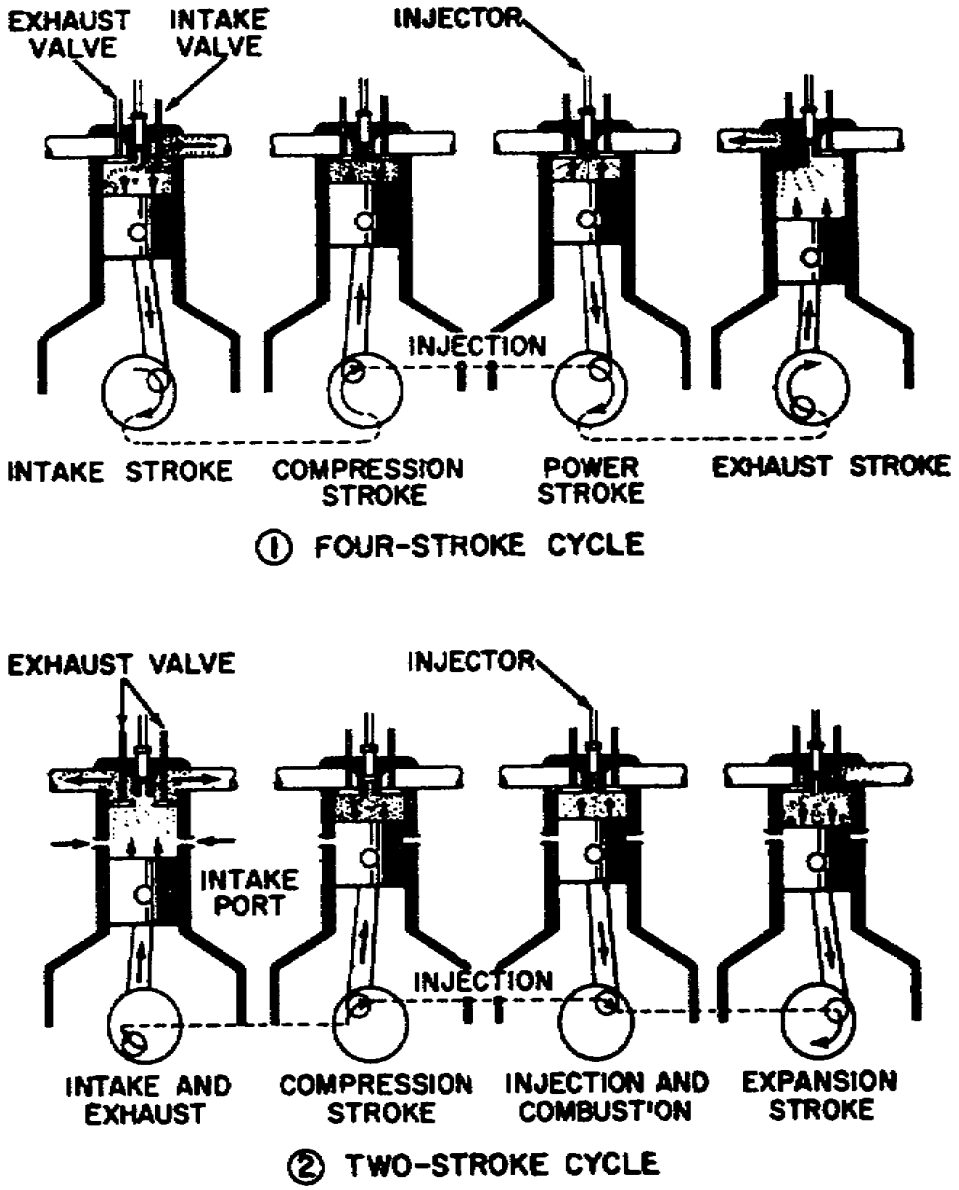

Figure 1.5. Operating Cycles.

stroke. The intake valve then closes and the piston goes up on the compression stroke, compressing the air within the cylinder. Fuel is injected through the injector while the air is compressed, and combustion occurs. The combustion, with resultant pressure, drives the piston back down on the power stroke. The piston rises again on the exhaust stroke and expels the air through the exhaust valve, a process called scavenging.

Piston action in the two-stroke cycle engine is basically the same. A difference in scavenging accounts for two strokes rather than four. Air entering the intake port pushes the oxygen-depleted air, left from the previous combustion, out through the exhaust valves. The compression stroke then occurs. Notice, in the lower

portion of figure 1.5, that the piston itself closes the intake port on this stroke.

1.5. PRESSURE CHARGING

Air ordinarily enters the cylinder at atmospheric pressure. The amount of fuel entering the cylinder is therefore limited because it has to be related to the amount of oxygen available to mix with it. If too much fuel enters the cylinder and is left unburned, it settles on the cylinder wall and piston and dilutes the lube oil film. This prevents a tight fit and causes leakage of air and loss of power. Therefore, the amount of entering fuel must be carefully regulated. Also, it must enter the cylinder so that the first fuel entering begins burning before the rest of the fuel enters, providing gradual, even combustion. If all the fuel enters the cylinder before ignition begins, it all burns at once--explodes--and a loud knock from the explosion, called combustion knock, occurs.

A pressure-charged engine provides a method of putting more air, more fuel, and resulting greater power into the cylinder. By this method, sometimes called supercharging, power can be increased 50 percent in a four-stroke engine and 35 percent in a two-stroke engine. Extra air is made to enter the intake valve or intake port by compression. A number of air-compressing devices have been used to furnish supercharging air. The kind most commonly used on diesel-electric locomotives is the turbine compressor, operated by a gas turbine in the exhaust system. It is the most logical place for this turbine because a great deal of energy is wasted through exhaust of burned gases. Heat balance figures show the loss to be as much as 40 percent of the energy liberated from the fuel by combustion. This energy is captured to run the turbine which is connected to the compressor that delivers air under pressure to the engine.

1.6. FUEL SYSTEM

The fuel system, often referred to as the heart of the diesel engine, squirts the proper amount of fuel into the cylinder at the proper time. The most important part of the system is the injector, which measures out the right amount of fuel, injects it into the cylinders under high pressure, and reduces it to a fine spray. Other parts of the fuel system are a tank to hold the fuel; a fuel-oil pump, driven by the motor, to get oil from the tank to the injectors; filters to clean the oil as it passes through the system; an injection nozzle to direct fuel into the combustion chamber in the best pattern

for combustion; and an emergency fuel cutoff valve to stop fuel from flowing from the tank in an emergency.

Generally speaking, fuel begins to enter the combustion space of the cylinder when the piston is about 15 degrees before top dead center. When the kindling-combustion temperature of the fuel is reached, the sprayed droplets of fuel begin to burn. The fuel still being injected then burns as soon as it leaves the injection nozzle. When fuel is delivered by the injection pump under sufficient pressure, the nozzle valve lifts against spring pressure; fuel enters the nozzle and is sprayed from it into the combustion chamber. Several types of combustion chambers are used. The simplest type, and the one most commonly used in military diesel-electric locomotives, is the direct or open chamber, illustrated in figure 1.6. The entire supply of air is in the cylinder, with a depression in the piston crown providing the combustion space. With this type of combustion chamber, heat loss is small and fuel consumption low. Also, the engine can start quickly during cold weather.

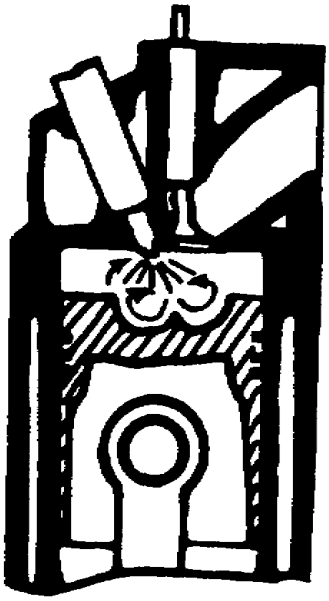

Figure 1.6. Open Combustion Chamber.

a. Fuel tank. The fuel is contained in a tank fitted with baffle plates to prevent surging and with a pit to catch sludge and water so that they can be drained out. Since the fuel pumps alone cannot raise the fuel to the cylinder's intake port, two alternative methods of supplying fuel can be used. A small service tank can be located above the pumps and the fuel can enter the pumps by gravity or, if the service tank is not used, fuel can be pumped from the main tank by a mechanical or electric pump.

b. Fuel injection pump. A fuel injection pump, illustrated in figure 1.7, not only creates the injection pressure but determines the amount of fuel injected. Its toothed rack, controlled by the engine governor or by the speed control lever, varies the amount of fuel and actuates all the pump elements. The pump is primarily a piston or plunger, sliding in a barrel. The lower end of the plunger has two projections which engage slots in the control sleeve. Oil enters the intake port and is trapped above the helical groove and slot whenever it rises to cover the spill port. Various positions of the groove and slot are shown in figure 1.8. Position (a) shows the plunger at its lowest point and position (b) shows it when both ports are closed during its rise in the cylinder. Positions (c), (d), and (e) show the plunger when the locomotive

is at full load, half load, and idling. When the locomotive is at a full stop, the plunger is at position (f).

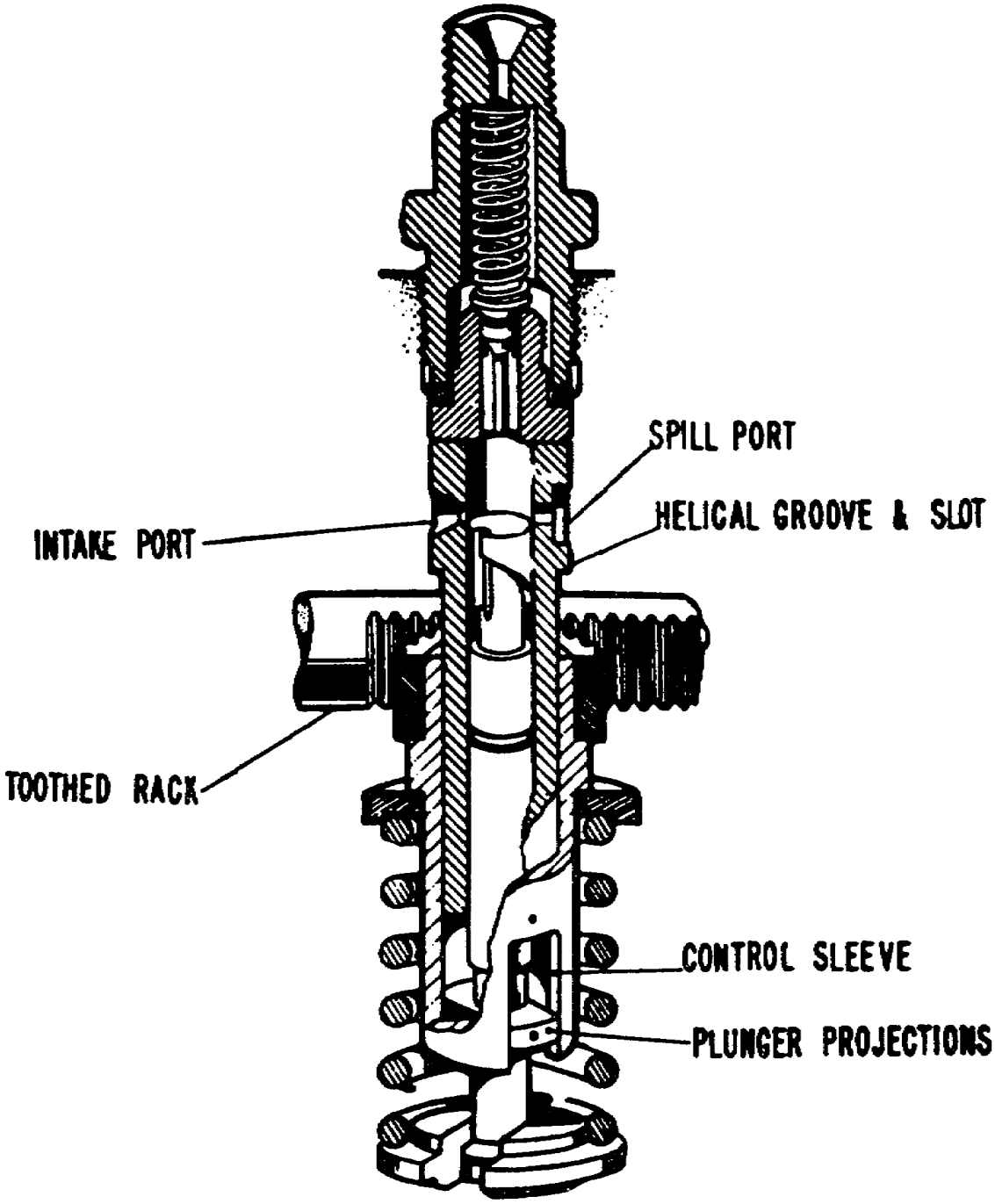

Figure 1.7. Fuel Injection Pump.

c. Fuel filters. Since dust and grit in the fuel are the main causes of diesel engine trouble, the most important of all precautions is fitting efficient filters in the fuel oil supply line. The equipment is quickly ruined if fine particles of dust and grit are allowed to enter the fuel line; irregular running, loss of power, and poor

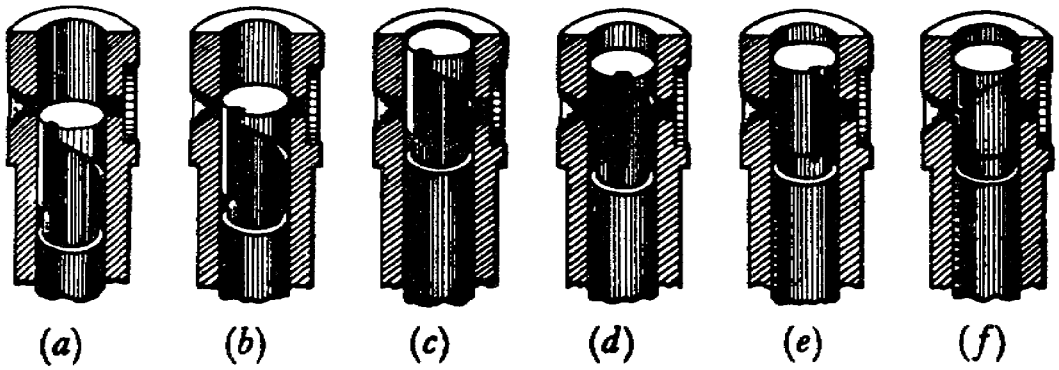

Figure 1.8. Fuel Metering.

starting will result. The plunger in the fuel pump and the helix opposite the spill port are usually worn first when dirt is in the fuel.

Most diesel engines use two kinds of fuel filters: a primary or coarse filter between the supply tank and the fuel supply pump, and a main or fine filter between the supply pump and the injection pumps. They are made of either metal or fabric. Metal filters are used as primary filters because the fine particles that pass through them are not as harmful to the supply pump as they would be to the injection pump. They are cleaned by scraping the metal disks. Because of their greater filtering qualities, fabric filters are usually used as main filters to protect the fuel injection pump. They have bags which are turned inside out to get rid of dirt, then washed and reinstalled.

1.7. WATER COOLING SYSTEM

Heat originating in the engine is absorbed by circulating water and dissipated in a fan-cooled radiator. In a diesel-electric locomotive, the fan is driven by a motor powered by an auxiliary generator. Since heated water helps the engine to reach its best operating temperature more quickly, the radiator is not brought into the water circuit until the water is quite hot. Temperature of the water can be regulated by louvers on the front of the radiator.

The water is circulated by a pump driven from the engine. It goes through water jackets between the cylinders and cylinder liners, and is then routed through the radiator to be cooled. With a well-regulated radiator, water enters the engine at 100°-120° F. and leaves it at 150°-180° F. Because heat and cold cause metal to expand and contract, it is better to use a high rate of water circulation with a small difference in temperature of the water entering and

leaving the engine than to circulate the water more slowly and have a larger difference in entering and leaving temperatures.

Water in the cooling system is treated to remove hardness, to minimize corrosion, and to remove suspended impurities. Hardness, a term used to express the presence of scale-forming salts in raw water, can be removed by a water softener. Dry compounds should not be poured into the radiator as they may clog the system. Water should be treated in a separate container first and solids allowed to settle before drawing solution off for the engine. If treatment is improper or ineffective, radiators and water jackets will become clogged and cylinder liners corroded.

1.8. LUBRICATING SYSTEM

Sometimes, oil is used for cooling as well as for lubricating. When this is done, a separate oil radiator with its own cooling fan is provided with the main radiator. Used for bearing lubrication, the oil's circulation rate is lower than when it is used for piston cooling and lubrication. Oil hits the underside of the piston in a fine spray. The crankshaft, end bearings, operating gear, and camshaft are lubricated by oil under pressure; oil without pressure, free return oil, lubricates the camshaft driving gears and cylinder walls. Contaminating particles can usually be filtered out.

a. Contamination. Some contamination of oil is inevitable. For example, the oil itself will oxidize and form corrosive acids. These acids are prevented from harming the engine by additives which either keep the oil from oxidizing or provide a protective coating on the parts they touch. In addition, the oil should possess some detergent properties to keep the contaminating matter in suspension so that it will be drained off when the crankcase is drained. Contaminating materials found in the oil may be any of the following: metal bits caused by wear of the engine, carbonaceous particles resulting from fuel incorrectly burned or caused by breakdown of the oil itself, unburnt fuel, cooling water that has leaked in, and acid water caused by cooling of burnt gases which have passed by the piston.

b. Filters. Oil circulation pumps are protected from contamination by gauze screens that remove the heavier substances from the oil; smaller particles are removed by metallic strainers made of very fine gauze, steel wool, or closely spaced plates. The finest materials and carbon carried in suspension in the oil are removed by absorbent filters made of special papers, cotton, or felt. Two methods of routing the oil through the filters are used: full -

flow filtering, which passes all the oil through the filter; and bypass filtering where only a part of the oil is continuously bypassed through the filter. Full-flow filters have relief valves that can open to take the oil out of the filter's path when the pressure drop across the filter is excessive.

1.9. AIRBRAKE SYSTEM

Air, supplied by an air compressor, is used to operate brakes on military diesel-electric locomotives. The airbrake system is made up of a compressor to supply air, two main reservoirs to cool and store it, and a governor to control the compressor's pumping. It also consists of the brake cylinders, mechanical linkage, and valves. Pistons and rods of the brake cylinders are connected through the brake levers to the brakeshoes. Air pressure forces the pistons outward and transmits the force through the rods and levers to the brakeshoes and applies them to the wheels.

Several kinds of airbrakes are used on diesel-electric locomotives and a clear distinction must be made among them. Controlled by levers from the operator's cab, airbrakes are automatic, independent, or a combination of the two. On locomotives used in foreign service, a vacuum brake system is used.

a. Automatic brakes control both locomotive and train. Pressure is maintained in the brake pipe the entire time the train is operating. Reducing pressure applies the brakes and returning it to normal releases them. On each car in the train, an auxiliary reservoir holds air for the brake cylinders. The air in the cylinders is used to activate the brake linkage.

b. Independent brakes control only the locomotive. They are used generally for yard switching service and for trains of a few cars because car brakes don't operate, resulting in rough operation and slow stops.

c. Both independent and automatic brakes are sometimes used so that greater control is possible. The two systems are completely separate and have separate controls.

d. In vacuum brake operation, the compressed-air brake pipe is cut out and the vacuum brake valve connected. The locomotive and train automatic brakes are then controlled by the vacuum brake valve and the independent brake by the independent brake valve handle. Military railway switchers and other diesel-electric locomotives in the military fleet designed for foreign service have

vacuum brake valves, or can have them installed, to handle trains in foreign countries where most rail cars have vacuum brakes.

1.10. AIRBRAKE EQUIPMENT

In addition to the compressor, governor, reservoirs, and valves previously mentioned, all airbrake systems have many other parts. Typical examples are the cutout cocks; pressure gages; equalizing reservoir; distributing, feed, reducing, and quick release valves; and deadman control. These are discussed in the following subparagraphs.

a. Cutout cocks are used to bypass parts of the circuit when they are not needed.

b. Two pressure gages are common in airbrake systems. One indicates main air reservoir and equalizing reservoir pressures; the other shows locomotive brake cylinder and brake pipe pressures.

c. An equalizing reservoir adds volume to the space above the equalizing piston in the brake valve so that reductions in brake pipe pressure may be properly made during service applications of the brakes.

d. The distributing valve, when actuated by the brake valves, permits air to flow to the locomotive brake cylinders, maintains pressure against leakage when brakes are held in applied position, or permits air to exhaust to the atmosphere when brakes are released.

e. A feed valve automatically maintains a predetermined air pressure in the brake pipe.

f. A reducing valve reduces main reservoir pressure for independent airbrake operation or for an air signal system.

g. A quick release valve provides a rapid release of brake cylinder pressure during the release operation.

h. Deadman control is a safety device which must be pressed when the locomotive is in operation. It is released only when the brakes are to be applied. Release of the deadman pedal causes a warning whistle to sound for approximately 4 seconds after which the brakes are automatically applied; automatic application of the brakes can be avoided if the pedal is pressed again during the warning period.

1.11. TRUCKS

A truck consists of side frames, wheels, axles, journals and journal boxes, a bolster, springs, bearings, and brake rigging. Besides connecting the wheels to the locomotive, the truck must carry vertical weight, absorb lateral thrusts, support the tilting tendency of the locomotive, travel on uneven track without distortion, carry the brake rigging, and, on some locomotives, carry the traction motors. A pair of guides, called pedestals, is supported by the side frame and holds the journal boxes. Some locomotives have chains attached to the underframe and to the truck to limit the swing of the truck in case of derailment.

The swivel truck, shown in figure 1.9, is used on all but the smallest diesel-electric locomotives. Each swivel truck has a center plate which supports the locomotive frame superstructure and allows the truck to turn freely on curves. Tilting of the superstructure is limited by side bearings mounted between the underframe and the truck frame. The principal types of swivel trucks in locomotives larger than 40 tons are four-wheel rigid and four- and six-wheel swing bolster.

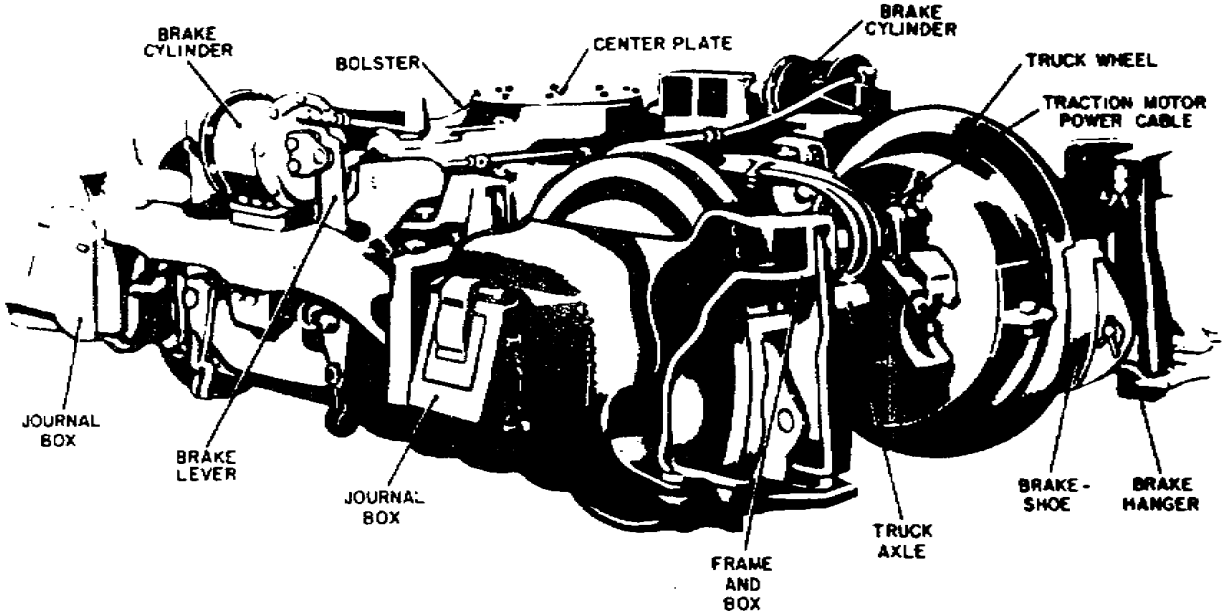

Figure 1.9. Swivel Truck.

In a rigid truck, the bolster and frame are cast together; in the swing bolster truck, the bolster is independently suspended and can absorb some of the shock between the truck and body. For this reason, the swing bolster truck is more suited to heavy road service. Because six-wheel swing bolster trucks have additional

wheels, the locomotive's weight is distributed more evenly along the rails. Some of the six-wheel trucks use four wheels as driving wheels and two as idling wheels, while in other six-wheel trucks all six are driving wheels. Idling wheels merely help to equalize the weight distribution of the locomotive.

1.12. ACCESSORIES

The locomotive engine supports various accessories such as the horn and windshield wiper. These are actuated by either mechanical or electrical means to parts of the engine.

a. Bell. The signal bell is stationary with a movable clapper operated by an air valve located at the engineman's station. The bell is usually located under the floor behind the pilot or switchman's footboards on the right side of the front end of the locomotive.

b. Horn. The horn, operated by air valves that allow air to be forced through the sounding device, is mounted on top of the cab and controlled by two pull cords above the control stand. One cord gives a soft tone and the other a full tone. The horn shutoff cock is in the air line above the floor in front of the controller. This air line supplies the horn valves with air.

c. Speed recorder. The speed recorder, similar to a speedometer, can be operated hydraulically, mechanically, or electrically.

d. Windshield wipers. Windshield wipers are operated by air from the compressed air system. They are controlled by valves over the cab windows and operate independently of each other. Windshield wipers should never be run on a dry window as dirt on the window will scratch the glass.

e. Sanding system. A sanding system delivers sand between the wheel and the rail. It has three parts: the sand trap, the control valve, and the operating device. Sand is kept in a box and flows through the sand trap and pipe to the rail. In some locomotives, the sanding system can be operated by the automatic brake valve handle. In others, it is operated by hand.

f. Temperature controls. On larger locomotives, water temperature in the engine cooling system is regulated automatically. When water temperature changes, a thermostat operates switches which activate fan motor contactors. As the temperature increases, a medium-speed relay closes; further increase closes a full-speed

relay. If the temperature drops, the same operations take place in reverse order.

Some engine-cooling fans are motor driven and receive their power from an alternating-current generator. Various combinations of fan contactors provide for fan operation through the traction motor circuit. Power is transmitted to drive the cooling fans through a magnetic clutch called the eddy current clutch. Fan speed is varied by changing the excitation of field coils on the clutch. Other engine-cooling fans are mechanically driven.

g. Engine heaters. Oil-fired engine heaters are provided for operation in severely cold weather. The cooling, lubricating, and fuel oil systems and batteries must be warmed before starting the engine if prolonged layover has resulted in congealed fuel oil or lubricating oil. Continued operation of the heaters is often necessary after the engine is started. Special insulation of oil lines, tanks, and compartments is part of such an installation, often called a winterization system. The heaters use fuel from the main locomotive fuel oil system, but a small tank at the heater is automatically kept full. This reserve supply of fuel may even have to be heated before the heaters are started. After the heaters are operating, they supply heat through a hot water piping system or an exhaust gas system to the powerplant and essential auxiliary equipment. An electric motor which obtains its power from the locomotive's auxiliary power lines drives a fuel pump, water circulating pump, and blower. The fuel oil is ignited in the fire pot by a continuous electric spark. The equipment does not eliminate the need of draining the cooling system or keeping it filled with an adequate antifreeze solution when the locomotive is shut down.

h. Cab heaters. Cab heaters are installed on most locomotives to keep the cab comfortable in cold weather. They heat with hot water, electricity, or hot air. The hot-water heater is connected to the engine water system which supplies the heat. A small electric fan is built into the heater to circulate air over the water coils and into the cab. The heater switch in the cab connects the fan to the auxiliary power lines. Fan speed can be varied by a rheostat incorporated with the switch. Cocks are provided for shutting off the flow of water and for draining the heaters. An all-electric heater is essentially the same as the hot-water heater except that the heating element is an electric coil. Electric defrosters, which work on the same principle, have a separate control switch. Hot-air heaters consist of ducts through which hot air from the engine radiators is forced to the cab and cab windows.

1.13. SUMMARY

A diesel engine can be either two-stroke or four-stroke and, except for its ignition, is much like any other internal combustion engine. It is one of three types--V, vertical in-line, or horizontal--depending on the arrangement of its cylinders.

The fuel system includes the fuel tank, fuel and ignition pumps, filters, injection nozzle, and emergency fuel cutoff valve. The fuel tank has baffle plates to prevent surging and a pit to catch sediment so that it can be drained out. In some locomotives, the fuel tank is above the pump and fuel enters the pump by gravity. In others, fuel is pumped from the tank into the main pump by an auxiliary pump. The fuel pump creates the injection pressure and determines the amount of fuel injected into the cylinders by the injectors.

In an engine with a water cooling system, water is run through water jackets between the cylinders and cylinder liners. The water is directed through a radiator to cool it. Louvers on the front of the radiator can be opened and closed to regulate the heat escaping from it. Occasionally, an engine is designed so that the pistons are cooled also by their lubricating oil. When this is done, a special oil radiator, with its own cooling fan, is provided in addition to the water cooling radiator.

Lubricating oil should have some detergent properties so that contaminating materials can be kept in suspension and filtered out by strainers, made of gauze, steel wool, or closely spaced plates.

Brakes for a locomotive can be the kind that control the locomotive, the train, or both. Air pressure for the brakes is supplied by a compressor.

The weight of the locomotive is carried by the trucks, which also absorb lateral thrusts and oppose the tilting tendency. A truck is made of frames, wheels, axles, journals and journal boxes, bolsters, springs, bearings, and brake rigging. Most locomotives are equipped with chains to limit the swing of the trucks in case of derailment. Locomotives larger than 40 tons use four-wheel rigid trucks, four-wheel swing bolster trucks, or six-wheel swing bolster trucks.

Accessories supported by the locomotive engine include a bell, horn, speed recorder, windshield wipers, sanding system, temperature controls, and engine and cab heaters.

Section II. Electric System

1.14. GENERAL

In understanding the electric system, it may help to compare it to a water system such as the one illustrated on the left in figure 1.10. The path of the water system, the pipe, compares to the wires of the electric system, illustrated on the right in figure 1.10, which form a path called a circuit. In the water system, the pump supplies energy and the turbine absorbs it. Similarly, in the electric system, the generator supplies energy and the motor absorbs it.

In the water system, the pressure the pump supplies varies; the size of the pipe must allow for this variance of pressure. Different size pipes offer different resistance so that the quantity of water flowing through the pipe is affected. The characteristics of the water system are paralleled by like factors in the electric system where they are called volts, ohms, and amperes. These and other basic principles which govern the flow of electricity and its related magnetic effects are discussed in this section.

1.15. VOLTAGE

Voltage is the pressure that forces current through a circuit. The pressure is supplied by an electric generator or battery and is often called potential difference or electromotive force (emf). When a circuit is available, the voltage causes a current to flow; when the circuit is closed or broken, the current will not flow. In practice, a volt is defined as a potential difference of pressure that will cause one ampere to flow through a resistance of one ohm. Voltage is the pressure that forces current through a circuit.

1.16. RESISTANCE

Resistance is the property of a material, or conductor, which opposes the flow of current when voltage is applied and which converts electrical energy into heat. An ohm is the unit used to measure resistance. Very small resistances are measured in millionths of an ohm, called microhms. Large resistances are measured in millions of ohms, called megohms.

Materials that offer very large resistance are called insulators or conductors. Conductors carry electric current easily, while insulators offer more resistance to the flow of current. Although there are no perfect insulators and conductors, organic and vitreous

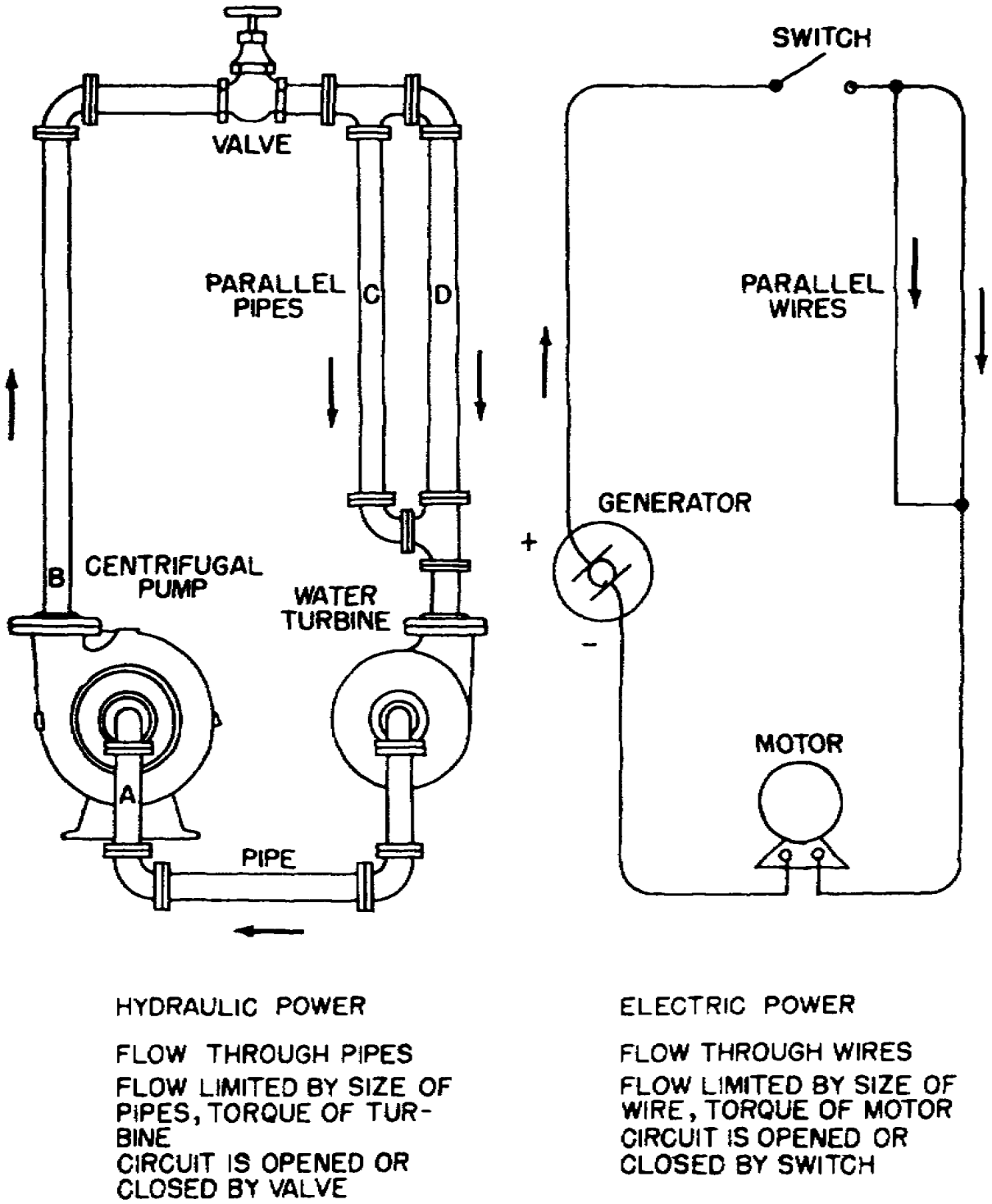

Figure 1.10. Similarity Between Water and Electric Systems.

substances such as rubber, oil, ceramics, and glass usually make good insulators; metals usually make good conductors. The resistance of an insulator is expressed in megohms and is measured by an instrument called a megger.

1.17. CURRENT

An ampere is the rate of flow of electric current. Technically, it is that flow of current which deposits a specific weight of silver from a standard silver nitrate solution under prescribed conditions in 1 second.

1.18. OHM'S LAW

George Simon Ohm, a German physicist, created the electrical formula known as Ohm's law in 1827. Ohm's law states the relationship between voltage, resistance, and current: in a simple closed circuit of fixed resistance the current in the circuit is equal to the voltage divided by the resistance. Resistance is represented by R, voltage by E, and current by I; and the formula is $I = \frac{E}{R}$

1.19. SYMBOLS

An electrician uses standardized symbols to represent the various parts of a circuit. Those most frequently used in locomotive circuits are shown in figure 1.11. The symbols represent basic parts of apparatus instead of a separate symbol for each piece of equipment. For example, the coil of a ground relay, a wheel slip relay, and a field shunting relay are always represented by the same symbol for an operating coil and the contacts are always represented by the same symbol for contacts. To identify separate pieces of equipment, the drawing symbols are accompanied by letters, such as GR for ground relay or WS for wheel slip relay. In an actual wiring diagram, the location of parts of the circuit are shown in their true relationship; in a schematic wiring diagram, all the parts are shown but not necessarily in their true locations.

1.20. SCHEMATIC WIRING DIAGRAM

The schematic wiring diagram for a locomotive is very much like a road map. The lines, used to show electric circuits (highways), and symbols, used to show the devices in the circuits (cities), form an electrical map to help in tracing out circuits and locating troubles on a locomotive. Unlike an automobile trip, which

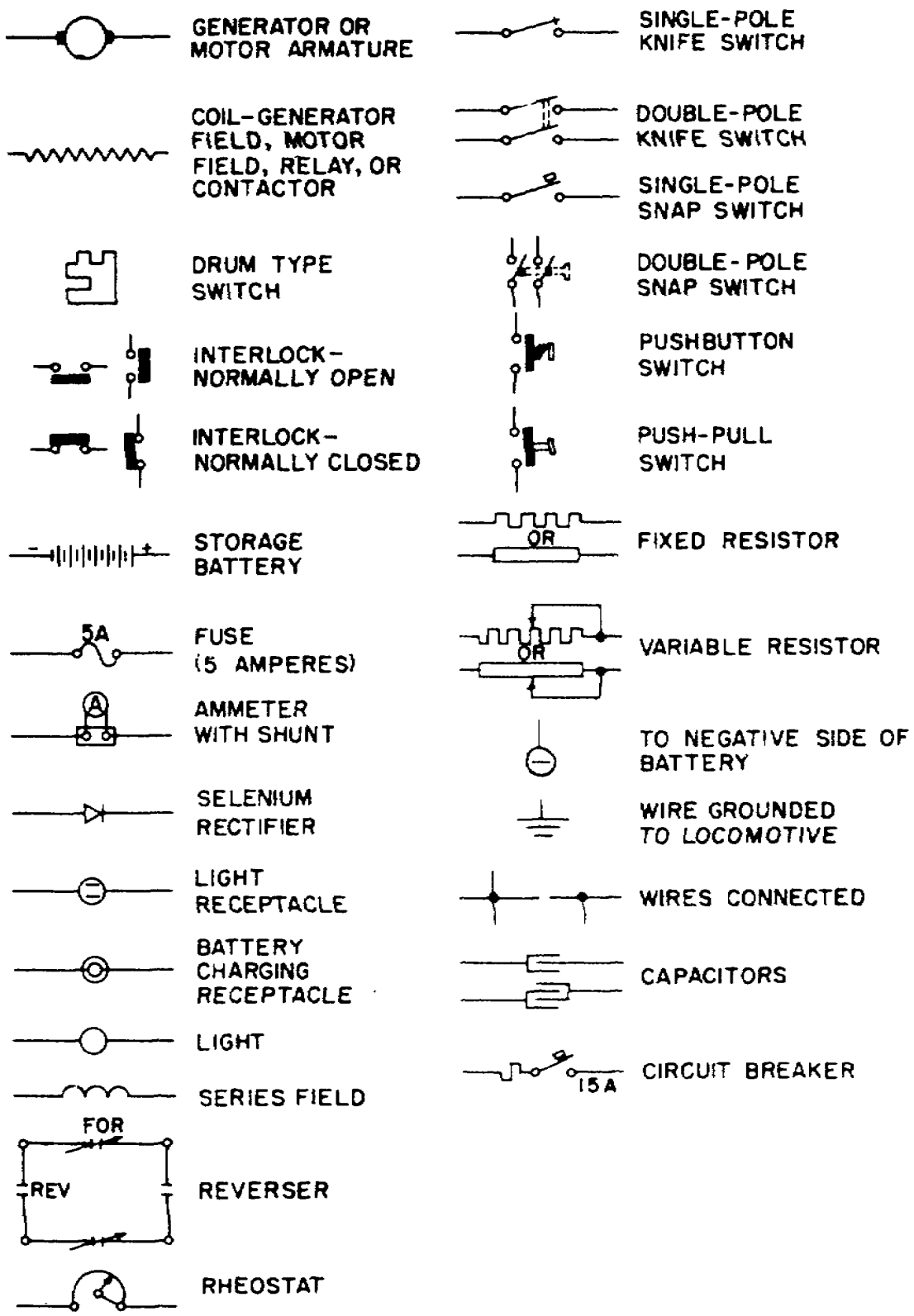

Figure 1.11. Electrical Symbols.

may or may not end where it started, electricity won't start unless it has a complete circuit back to its source, a generator or battery.

Look at the schematic diagram of the fuel pump circuit in figure 1.12 and trace out one of the highways on the electrical map. Here you see a battery, a fuel pump contactor coil, its contacts, and a fuel pump motor. The symbol (A) is standard for motor armature. All switches and contacts are shown on their normal position, that is, with no power on.

The job of the fuel pump is to pull the fuel out of the tank and deliver it to the engine. It "shovels the coal" to the engine. The first step in starting this pump is to close the battery knife switch. This connects the battery positive to the 50 wire. But though the 50 wire is now "hot," nothing will happen because there is no path from it to the 4 wire, or battery negative. So next, close the fuel pump switch and make such a path. The current can now flow from the 50 wire through this switch and the fuel pump contactor coil to the 4 wire. When current flows through the coil, it sets up a magnetic field and closes the contactor. Now there is a path from the 50 wire down through the fields and armature of the fuel pump motor to the 4 wire. Current flowing through this path starts the motor; this drives the pump and furnishes fuel to the engine.

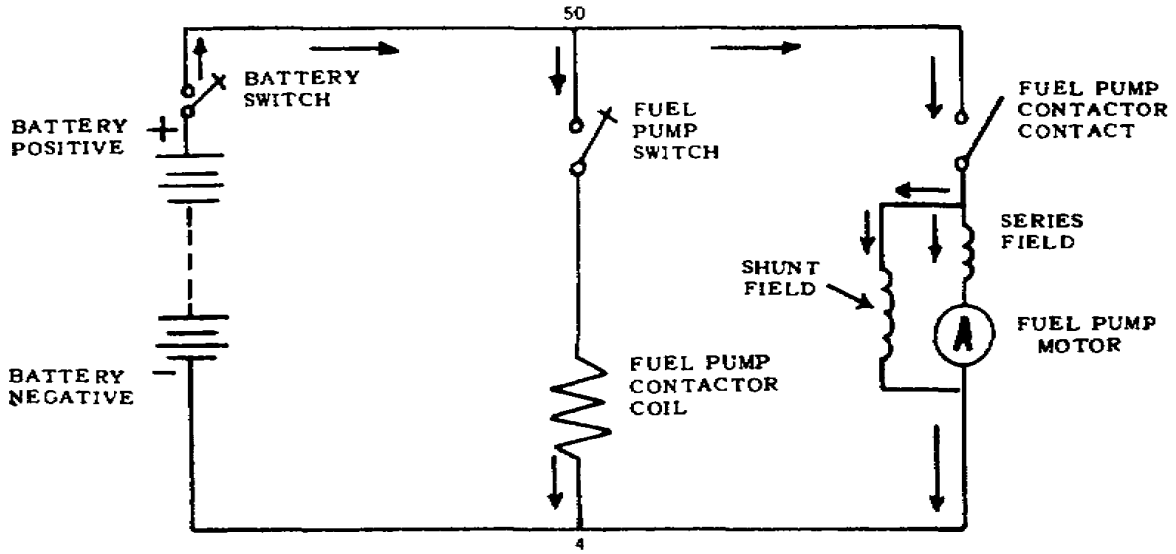

Figure 1.12. Schematic Wiring Diagram -- Fuel Pump Motor Circuit. *

In the simple diagram in figure 1.12, parts of the circuit are identified by their names as well as by symbols. Oftener than not,

*Diesel-Electrics . . . How to Keep 'Em Rolling, Simmons-Boardman Publishing Corp, pp. 75-76.

however, only the symbols are used and must be known by anyone attempting to trace out a locomotive circuit.

1.21. WORK AND POWER

Work and power are often confused. Work, the result of an applied force which results in motion, is the product of force times the distance along which it moves, or Work = Force x Distance. Power, the rate of doing work, has the element of time that work does not; power equals work divided by time, or $\text{Power} = \frac{\text{Work}}{\text{Time}}$. Work is expressed as foot-pounds while power is expressed as foot-pounds per second. Work done on a body results in an increase in potential energy, kinetic energy, or heat of friction. In the illustration shown in figure 1.13, energy is contained in the bucket of water. Potential energy is that possessed because of the water's position. Since the bucket of water is 10 feet high and there are 20 pounds of water, the potential energy is 20 x 10 = 200 foot-pounds. If the water runs down the pipe toward the pump it becomes kinetic energy, that is, energy in motion. If the 20 pounds had moved in a horizontal line for 10 feet, no more than 200 foot-pounds of work could have been done. Since the potential energy of the water has not changed, the work has all gone into the heat of friction.

1.22. MEASURING CURRENT

An ammeter, used to measure the quantity of current flowing in a circuit, is connected either in the main power generating circuit or in one of the traction motor circuits. If the latter prevails, other traction motor circuits carry an equal amount of current. Each ammeter is equipped with a shunt--a bypass carrying most of the current--and the total current load passes through either the ammeter or its shunt. The shunt is designed to work with the ammeter so that there is a relation between the current flowing through it and the current flowing through the coil of the ammeter. A pointer is attached to a coil which turns against a spring so that deflection is proportional to the current. The dial over which the pointer swings can be marked to read amperes or quantity of current flowing.

In addition to having figures showing the current in amperes, the ammeter may be marked in minutes, indicating the maximum time the locomotive may be operated at a certain load.

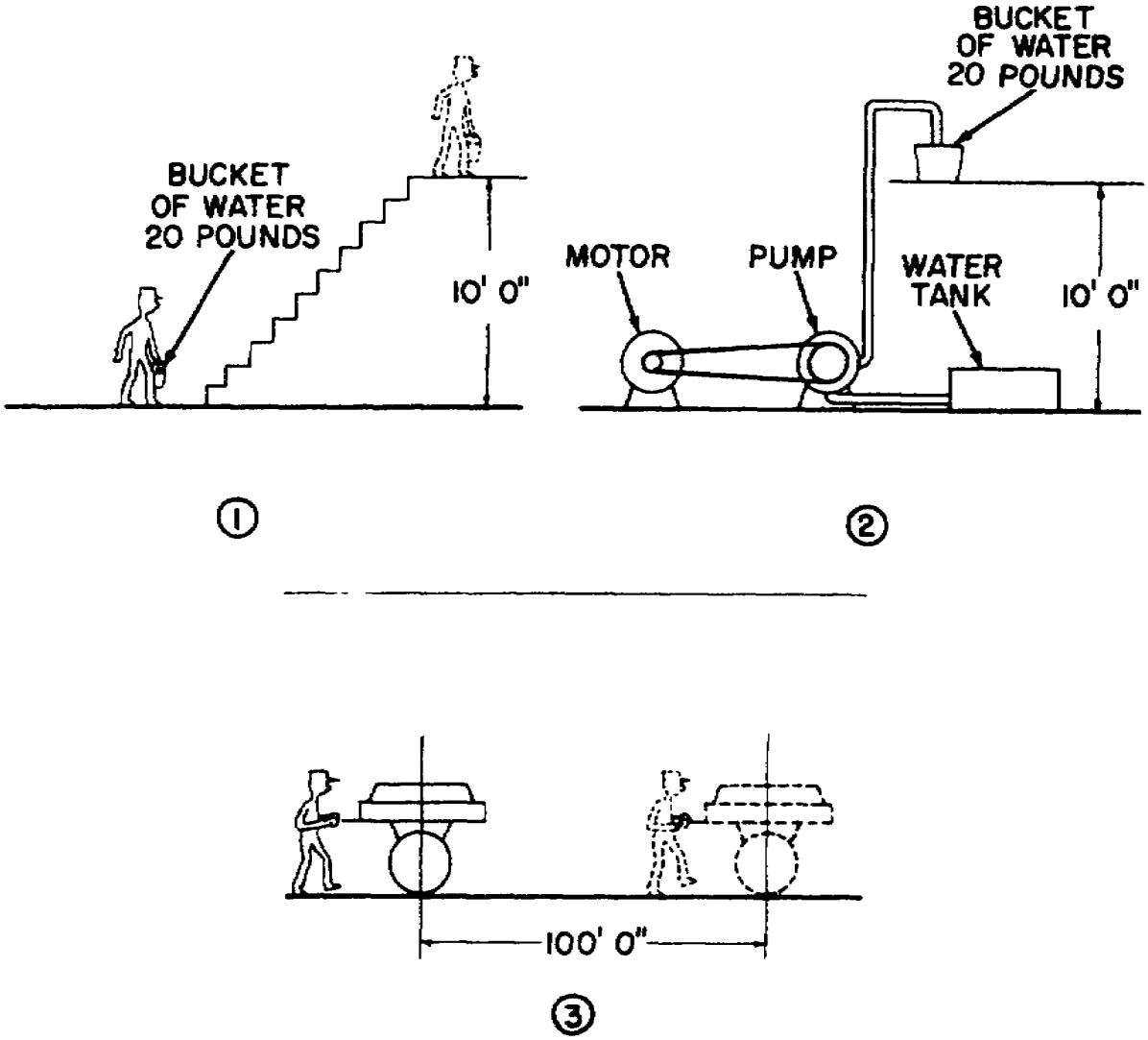

Figure 1.13. Work.

1.23. MEASURING VOLTAGE

Voltage is measured by a voltmeter, whose moving coil must have a high resistance to avoid short-circuiting the voltage. Therefore, the coil is connected in series with this resistance and no shunt is permissible. Voltmeters are connected across the load; this is distinctly different from the connections for an ammeter, which is connected in the circuit. Since voltage has been likened to pressure, a voltmeter can be compared to a pressure gage. It should be noted that neither a voltmeter nor a pressure gage has anything to do with the main flow. A voltmeter must be connected across the line or across the load. A significant difference in the appearance of voltmeters and ammeters is that ammeters have heavier terminals to which the wires are connected. The positive

and negative connections are designated on voltmeters as well as on ammeters.

1.24. OVERLOADS

The greatest damage likely to come from overloading a locomotive is overheating the traction motors. When the heat generated by the motors is equaled by the rate at which heat is dissipated, a "continuous rating" is attained. An ammeter indication greater than the continuous rating is called an overload. Since the motor itself can absorb some heat, a cold motor will not cause an overload condition as quickly as a warm motor; whereas a motor that has been operating at the "continuous rating" limit for a long time does not have an overload capacity at all.

Wiring is built to carry a certain load of current; but heavy current loads occasionally are imposed on it. An overload, if allowed in the wiring, can damage insulation and equipment. Overload protection is provided by devices, such as fuses and circuit breakers, that break the circuit before damage occurs. A fuse is inserted in the circuit and carries the full load of current. It has a low melting point and, when the current becomes excessive, melts and opens the circuit. Since it operates by melting, a fuse can be used only once. The circuit breaker, a permanent fixture, consists of a switch that is opened by a magnet coil when the current in the circuit reaches the danger point.

1.25. DYNAMO

A dynamo is a machine that converts mechanical energy into electrical energy, or electrical energy into mechanical energy. When the output is mechanical, the dynamo is called a motor; when electrical, a generator. A generator and a motor have the same basic construction and either may be called a dynamo. A dynamo is reversible and capable of operation as either a generator or a motor. Basically, a dynamo consists of a field or stationary coil and an armature or rotating coil.

In locomotives, the fields of the dynamo consist of magnetic pole faces bolted to the frame. Coils wound around the field poles are called <u>field coils</u>. The amount of current in these coils determines the strength of the magnetic field. The magnetic field, or flux through the poles, is termed the field <u>excitation</u>. The stationary pole and frame are called the <u>stator</u>; and the rotating coil, which carries the load current, is called the <u>armature</u> or <u>rotor</u>.

A definite relation exists between the direction of the field, the direction of the motion, and the direction of current. These directions can be determined by applying Fleming's right-hand rule for generators, and the left-hand rule for motors. Fleming's rules were originated by an English electrical engineer, Sir John Ambrose Fleming, 1849-1945. Look at the left-hand rule illustrated in figure 1.14; the thumb points in the direction of motion, the forefinger points in the direction of the field, and the middle finger points in the direction of the flow of current. The right-hand rule for generators works the same way.

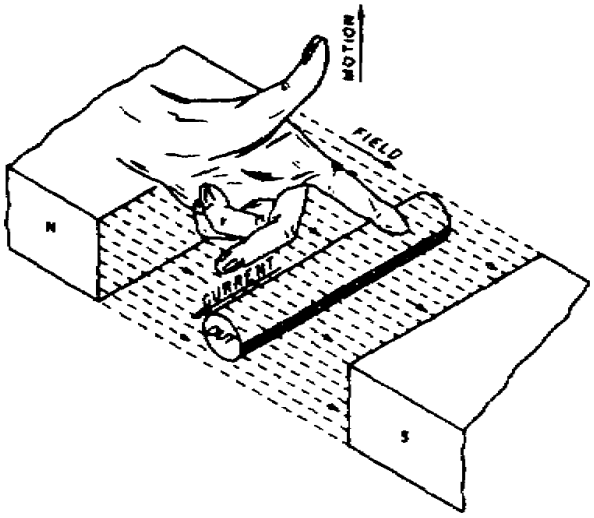

Figure 1.14. Left-hand Motor Rule.

1.26. GENERATOR

The value of the electromotive force, or emf, produced by a generator is related to the amount of change in field and motion, or to the rate at which lines of magnetic force are cut by the armature. The emf in a single armature coil varies even when the armature's speed of rotation remains constant. Look at figure 1.15; it shows how the armature cuts across more and more lines of force as it approaches 90 degrees. At 20 degrees, for example, one line has been cut; at 40 degrees, in the same period, four more lines have been cut. The emf varies with the number of lines that are being cut per unit of time and is zero at 0 degrees and a maximum at 90 degrees. At 180 degrees, the emf is again zero; between 180 and 360 degrees, emf goes in the opposite direction-- giving it the name alternating current. This describes a simple alternating-current (ac) generator.

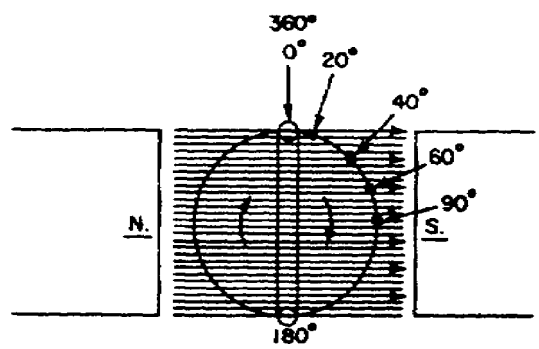

Figure 1.15. Relation of Electromotive Force to Speed.

Brushes in a generator or motor should be set at the point of zero emf, a point occurring approximately halfway between the main poles. Unfortunately, a self-induced emf exists in the coil at the

neutral point and the brushes are in the fringes of flux so that it is difficult to obtain satisfactory commutation. The most satisfactory solution has been to introduce a separate flux to produce a desired flux density in the neutral zone. This is done by small poles called interpoles located between the main poles.

Field armature cores are built up of layers of sheet steel to reduce strap currents called eddy currents. Since iron is almost as good a conductor of electricity as copper, electrical currents tend to flow almost as readily in the iron as in the copper. Lacking an outside circuit, however, they circulate within the cores and generate excessive heat resulting in a loss of power. The heat is much less in a laminated core than it would be in a solid core because the laminations provide passages through which air can circulate and carry away heat.

Armature coils are connected in either lap windings or wave windings. Coils in a lap winding overlap each other and are connected in parallel, while a wave winding is in series around the armature. Voltage is higher but current is lower in lap-wound coils than in wave-wound coils.

a. Alternating-current generator. In an ac generator, illustrated in figure 1.16, the ends of the rotating coils are connected to continuous metal rings, called sliprings, mounted on the axis (armature shaft) and insulated from each other. Metal or carbon blocks, called brushes, ride on the rings to make contact with the external circuit. The number of complete waves or cycles generated per second is called the frequency and is determined by the speed and design of the generator.

A generator's emf is affected most by a change in speed of rotation of the armature; a change in flux density caused by changing the current flowing in the field coil or by using a variable resistor; or a change in the size of the field or the size and turns of the rotating coil.

Since the current in the armature is alternating, some method must be used to change it to direct current before it enters the outside circuit. This can be done by using a commutator. The commutator reverses the connections of the coil to the external circuit at the same time that the emf reverses in the coil, and the alternating current in the generator becomes a pulsating direct current when it reaches the outside circuit.

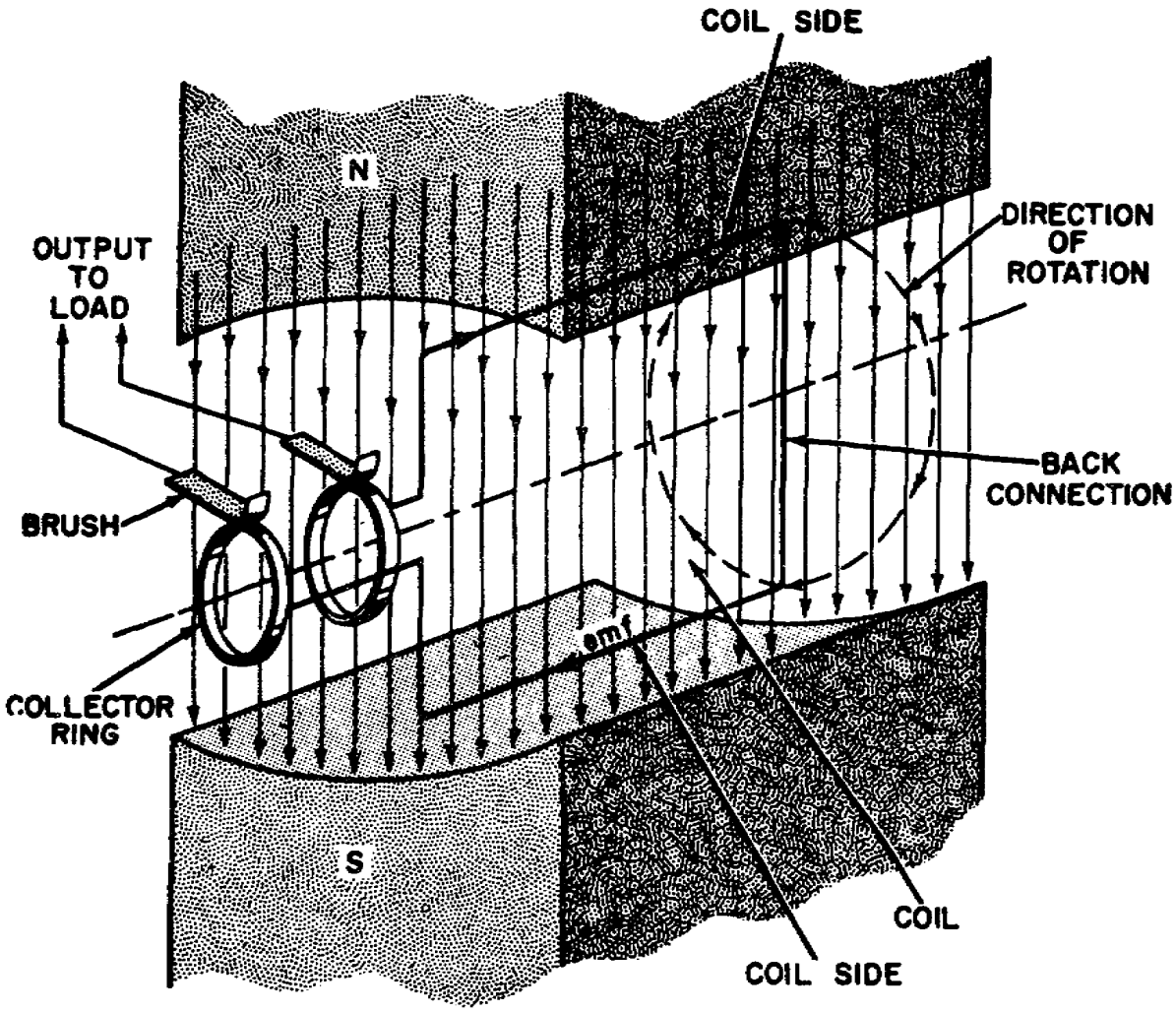

Figure 1.16. Alternating-Current Generator.

b. Direct-current generator. The direct current supply described in the preceding paragraph is not practical in commercial use, because the voltage reaches zero twice in each revolution of the generator and the power output would be too small. A practical generator must therefore have many coils, each coil being connected to a pair of commutator segments, so that the output of current from them overlaps and provides a continuous flow. A direct-current generator is one of three types, depending on whether the fields are connected in series, shunt, or a combination of the two. A series-wound generator has field winding in series with the armature; a shunt-wound generator has its field in parallel with the armature; and a compound-wound generator has both.

c. Alternator. An alternator is provided on some locomotives to supply ac power to fans and blowers. The stator contains the two-phase output winding, and the fields are wound on the rotor.

Field current is supplied by the auxiliary generator. A no-voltage relay, connected in the output circuit, gives protection against failure of ac power. A fuse or circuit breaker is in the line supplying the alternator fields, and, if this circuit is open, there is no ac power output. The alternator is attached to the main generator frame and is driven at engine speed by the main generator shaft. Voltage and frequency of the alternator, and consequent speed of the motors fed by the alternator, therefore vary with engine speed.

1.27. POWER TRANSMISSION SYSTEM

In the engine of the diesel-electric locomotive, as in all internal combustion engines, the relay of force begins with the push of the piston in the power stroke. Piston force travels through the connecting rod to the crankshaft, which transmits it to the rotary drive. Cranks of the crankshaft are counterbalanced and designed to insure an even and smooth distribution of force through the shaft.

Up to this point, power relay has been purely mechanical. If the locomotive were equipped with gears for its transmission system, the relay of force would be mechanical throughout. Gears in a transmission similar to that in an automobile, in order to be large enough to control a locomotive, would be too large and bulky to be practical. A transmission is omitted, therefore, in favor of wires that form an electrical transmission. These wires lead from the generator to traction motors that change the electrical power back to mechanical power. Motors are mounted in the locomotive trucks on some locomotives and are geared to the locomotive axles. About half of the weight of the motor is supported on the truck frame through a nose on the motor frame and the other half by bearings on the driving axle.

a. Electrical transmission. The task of the electrical transmission system is to receive mechanical energy from an engine, convert it into electrical energy in a generator, and transmit it by wires through controllers and relays to traction motors which change it back to mechanical energy at the wheels. A complete engine-generator set is called a power unit. Some locomotives have two or more power units, each requiring fuel, water, and oil pumps; radiator fans; and blowers. Besides the main generator, there is an air compressor and auxiliary generator; also powered by the engine, they supply the engine-starting equipment, airbrakes, pneumatic controls, and low-voltage light and power circuit.

b. Generator and traction motors. In diesel-electric transmission, a generator is mounted directly to the engine

crankshaft and an auxiliary generator is either coupled to the main generator or driven by a belt. One or more traction motors and their reduction gears are mounted on the driving axles of trucks and a final reduction gear is located between the traction motor and the axle. No mechanical parts are needed to reverse the engine, as is necessary with a totally mechanical transmission system.

The power produced by the generator is converted by a traction motor into mechanical driving force at the wheels. The motor can produce very high torque at start which decreases as the load on it increases. Adjustment of the generator field strength is made by a regulator that introduces resistance into the circuit as indicated by the governor. The governor acts on a valve which controls oil under pressure in its cylinder. During increased engine load, the governor's piston rises, fuel is injected, and the contacts are closed, causing the motor to rotate in the opposite direction and to introduce resistance into the circuit.

The traction motor is cooled by filtered air forced in either electrically or mechanically. The electrical method is preferred because it provides a full blast of air at all speeds while the mechanical system blows at slow speeds when the highest electrical current is in the motor.

c. Connecting-gear ratio. Ratio of the gears connecting the motors to the axles is selected on the basis of the service the locomotive is to perform. High-speed service, such as passenger service, calls for a ratio which keeps motor speed low. When power is more important than speed, such as for freight service, the ratio used is one that requires many revolutions of the motor for only slight movement of the locomotive. Intermediate ratios are used for general all-purpose service. Gear ratio is expressed by two numbers: one is the number of teeth on the axle-mounted gear; the other the number of teeth on the traction motor pinion. For example, if the axle-mounted gear has 60 teeth and the traction motor pinion 17, the gear ratio is 60-17 or 3.53:1.

1.28. MAIN GENERATOR

The main generator, shown in figure 1.17, converts the power output of the diesel engine into electric power for the operation of the traction motors. Directly connected to the diesel engine, the generator's speed varies with engine speed. The generator is self-ventilated by a fan mounted on its shaft. The main field of the generator is supplied by a battery or by an exciter controlled by a load regulator. A differential field, in series with the generator, is

wound to oppose the main field. The purpose is to vary the total field strength to obtain a constant kilowatt output. Other fields, such as starting fields, are used when cranking.

The main pole pieces of the generator are of laminated steel riveted together and bolted to the frame. The field coils are impregnated and baked with insulating compounds to guard against movement and chafing within the coil and to permit flow of heat to the surfaces. Built to withstand high speed and vibrations, the armature of this generator is balanced both before and after winding to reduce vibration. It is supported at one end by an antifriction bearing and at the other by the engine crankshaft.

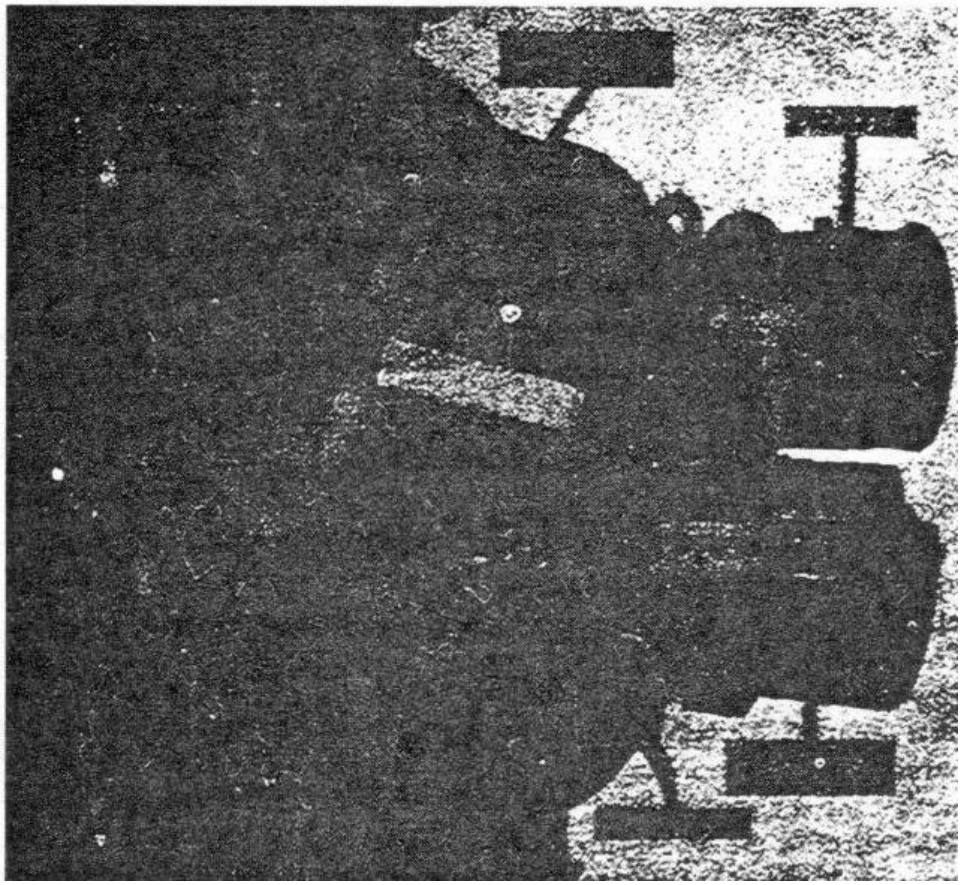

Figure 1.17. Main Generator.

1.29. TRACTION MOTOR

Similar to a generator, a direct-current motor such as the traction motor can be connected in shunt or in series. Shunt motors are used where a constant speed is desired; output of the motor varies little with a change in load. Series motors have good traction, but must always be connected to a load; otherwise they will speed up so fast that they will be damaged.

Traction motors are series-wound, direct-current motors geared to the locomotive axles and wheels, as shown in figure 1.1, item 33. They convert the electrical energy of the generator into tractive effort or mechanical energy. Half of the motors' weight is supported on the truck frame and half on the axle. The motors are either connected permanently in series-parallel or arranged for transition from series to series-parallel connection. The armature turns on roller bearings in the motor housing. The axle bearing is a split-sleeve type.

Traction motor fields are provided with shunts which divert a portion of the field current when the motors cannot absorb the full power output. Field shunting contactors can be operated pneumatically by magnet valves or by electric relays. A relay operation is one of the easiest to understand. Relays open and close at certain generator voltages, closing the field-shunting contactors and permitting some of the current to flow through the shunts and weaken the fields.

Blowers are provided in larger locomotives to force a large quantity of cooling air through the traction motors and thus prevent them from overheating. A locomotive must not haul a train unless the traction motors are adequately cooled because heat generated by heavy currents will damage the motors if it is not carried away. Blowers are mounted on the floor of the locomotive and ducts carry the air through the underframe to the motors; they may be mechanically driven by the engine or electrically driven.

1.30. EXCITER

The exciter supplies the main generator field current. It is a small generator that maintains power output as nearly constant as possible. To avoid overloading the engine, the strength of the main generator field must be varied so that the generator voltage is decreased as the current demand is increased.

The exciter's own field is supplied by several sets of windings which are independent of each other. One set of windings is the four-pole field, energized by the battery or auxiliary generator at a strength determined by a load regulator installed in the circuit. Another set of windings is a two-pole field fed by the exciter armature. A third set of windings is a differential, or reversed, field that is energized by current from the main generator. When current from the main generator to the traction motors is high, the differential field opposes the other exciter fields and reduces the exciter output.

1.31. LOAD REGULATOR

Control of the power output of the main generator is known as load control. As load is imposed on the engine, the governor admits more fuel until the fuel limit for that speed is reached. Any attempt to increase the load beyond this point will cause the engine to slow down. At such a time, a load regulator in the generator excitation circuit automatically reduces the power output of the generator by reducing its field excitation and the diesel engine continues to run at normal speed.

1.32. REVERSER

The reverser, shown later in figure 2.17, is an electropneumatic switching device that reverses the direction of current in the traction motor field windings. When the fields are reversed, the traction motors change their direction of rotation thereby changing the direction of travel of the locomotive. The main switching element of the reverser is a rotating drum; on its surface are copper segments that contact different combinations of sliding fingers as the drum rotates. Magnet valves on the reverser are fed through interlocks on the main power switches to keep the reverser from turning except when the power circuits are open. When a magnet valve (explained in par. 1.34c) is energized, air is applied to the pneumatic mechanism to turn the drum and to establish the proper electrical connections. If the coil of a magnet valve is burned out, or if the air supply fails, the reverser may be thrown manually by depressing a button on the magnet valve. If the engine is dead, the drum can be turned by hand.

1.33. CUTOUT SWITCH

A traction motor cutout switch is used to take the motors out of the circuit if there is an electrical failure in the circuit, such as a short circuit or ground. Three types of cutout switches are used: a toggle switch in each motor circuit; a multipole rotary switch which controls all motor circuits; and contacts mounted on the reverser. With rotary or toggle cutout switches, the control circuit to the main power switches passes through the traction motor cutout switch. When the cutout switch is open, the main power switches are therefore open, and the corresponding motors are disconnected from the generator. The switch setting should not be changed under heavy load because heavy currents are likely to arc and burn the contactors. Before opening a power circuit, idle the engine by the throttle or by an isolating switch.

1.34. MAIN CIRCUITS

Power from the main generator is carried by electric cables to the traction motors, which are geared to the driving axles. The main power circuit is this path of current flowing from the generator through the cables and motors, and back to the generator. Locomotives have three types of circuits: series, parallel, and series-parallel. In a series circuit, the same current passes through each device and connection in completing its path to the source of supply, and the total resistance of the circuit is equal to the sum of the resistance of all its portions. In a parallel circuit, the current from the source divides through two or more parallel paths and the total current from the source equals the sum of the current in the parallel paths. The resistance of a parallel circuit is always lower than the resistance of any of its individual parallel paths. A series of Christmas tree lights in which all go out when any one burns out (opens the circuit) is a familiar example of a series circuit; each bulb can stand only a portion of the voltage from a house circuit. The lights in which the other bulbs continue to burn when one burns out is a parallel circuit; each bulb operates on house voltage. If motors are connected in the same manner as the lamps, the same circuit characteristics apply. The difference in operating characteristics of motors at different voltages is a chief reason for the relatively greater number of methods used for connecting traction motors.

Many different designs of main power circuits are used. Each circuit is independent of the others, except for the small wires in the wheel slip relay circuit. Connections in many locomotives are permanently joined in series-parallel. A tie between the motor circuits exists when portions of the circuits are in series-parallel and no contactors are used. In order that full generator voltage can be applied when the motors are in series connection, a contactor will close if the tying circuit is in use and other contactors will open the circuit to and from the generator.

In electric drive, power can be easily varied. The throttle adjusts voltage, current, and tractive effort. While the throttle remains in the first notch, the current, or amperage, decreases rapidly because the motors, which are increasing speed, develop a greater counter-voltage. If the throttle is moved to a higher position, the fuel supply is increased and the engine and generator can deliver more power. When the throttle is advanced as far as possible, engine speed and generator voltage are at their maximum.

Various devices are used to change the connections in the circuit. The most common are the contactors, interlocks, magnet valves, and relays.

a. Contactors are switches used for opening and closing circuits. In circuits where the current is low, the contactors are magnetically operated and are energized by current from the battery. The magnet brings a movable contact into touch with a fixed contact in the main circuit; when they are not being used, a spring pulls the movable contact away. When a contactor is used in a traction motor circuit and has to handle heavier current, the contact tips must be pressed together tightly. Operated by compressed air, they are called pneumatic contactors although they use magnetic valves. When the operating circuit is closed and current flows through the coil, it moves the core by magnetic attraction and this movement opens the air valve.

b. Interlocks are auxiliary switches designed to control the connecting or breaking of circuits. Operated by another switch or perhaps by a contactor or valve, interlocks are called either "In" interlocks, closed when the main switch is closed, or "Out" interlocks, closed when the main switch is open.

c. A magnet valve consists of a magnet coil and a core acting upon an air valve. The coil is in the low-voltage control circuit and connected through interlocks, automatic controls, or manual controls in the same manner as the coil on a contactor. It usually returns to its de-energized position by spring action. The valve and coil are used in such applications as shutter control, compressor synchronization, and sanding, as well as in reversers and power switches as a built-in portion of the equipment.

d. A relay, a small magnetic electric switch consisting of a coil and several small contacts, changes connections in one part of a circuit in response to changes taking place elsewhere in the circuit. The relay coil may be in either the high-voltage or low-voltage circuits of the locomotive. Operating in much the same way as contactors, relays are not required to carry heavy current and are generally much smaller. They may be adjusted to open and close at various voltages to respond to operating conditions. When the contacts of a relay close, they close the circuit to the coil of the contactor or magnet valve controlled by the relay. More than one contactor in a magnet valve can be controlled by a relay by building the relay with several sets of contacts.

Relays are used for miscellaneous purposes and are named according to the purpose they serve. They are basically alike in construction and operation. Two of the most common are the ground relay and the wheel slip relay.

(1) Ground relay. Illustrated in figure 1.18, a ground relay is installed in the main power circuit to warn if a ground develops. When the circuit is grounded, current flows through the relay and its contacts close circuits to an alarm bell or an indicator

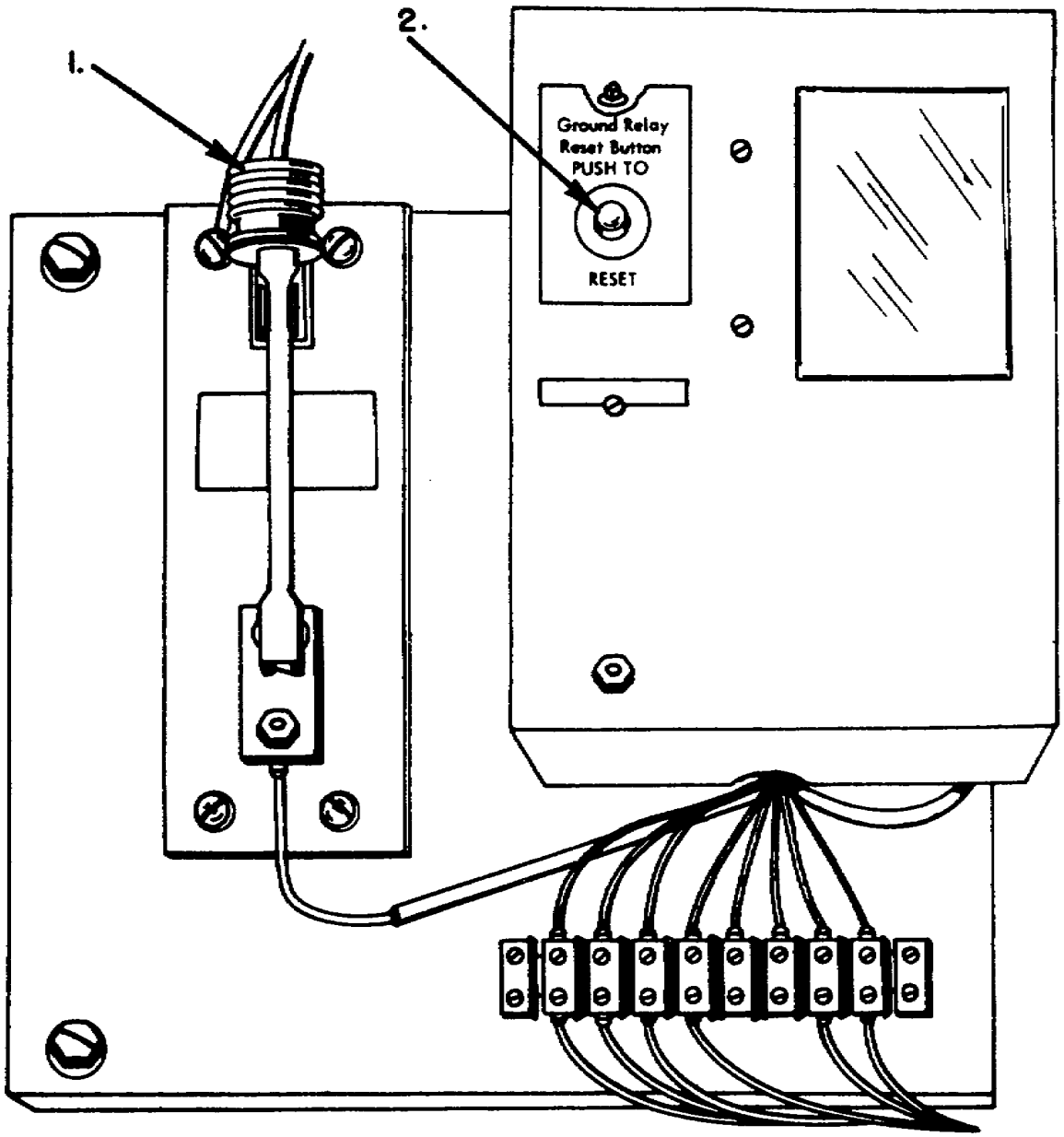

1 Ground relay cutout switch 2 Reset button

Figure 1.18. Ground Relay.

light. In most locomotives, it also idles the engine and disconnects the traction motors. In multiple-unit operation, the indicating light is the only action extending to the other units. A reset button is used to release the relay, and a cutout switch may be provided to make the relay entirely inoperative.

(2) Wheel slip relay. An indicating system using a wheel slip relay is frequently installed on diesel-electric locomotives. The system's relays are connected to resistors in the traction motor circuit. If a pair of wheels slip, unbalanced voltage causes current to flow through the relay. When this relay is activated, the contacts energize a governor solenoid which reduces engine speed and operates a warning buzzer, an indicator light, or both in the engineman's cab. Interlocks reduce generator excitation at the same time. When slipping stops, balanced voltage again exists and power is automatically restored. The buzzer or light is transmitted to all units in multiple, but engine speed is reduced only on the slipping unit.

1.35. MAIN POWER SWITCHES

The power contactors connect the traction motors to the main generators. They are pneumatically operated, heavy-duty, single-pole switches located in the high-voltage electrical-equipment cabinet. The contactor, sometimes called a unit switch or pneumatic power switch, consists of one fixed and one movable contact, a magnet valve, an arcing horn, an arc box, and a blowout coil.

When the throttle is advanced to the first notch, the magnet valve admits air to the cylinder, moving the piston to close the contacts. When the magnet valve is no longer energized, spring action on the piston opens the contactor. Contactors normally open when traction motor current has dropped to a negligible quantity, but provisions must be made for interrupting heavy current when the contactors have to open under load, as during an emergency brake application. Equipment for interrupting heavy current consists of an arcing horn to carry the current, an arc box to confine the arc, and a blowout coil by which the magnetic field of the coil forces the arc away from the tips. Arcing is a buildup of current at a contact point. This concentration of current, caused by a collection of matter that conducts current, burns the contacts, destroying their serviceability. With the interrupting equipment, the path of the arc increases in length, its difficulty in jumping the gap increases, it is cut, and current stops flowing.

1.36. ENGINE STARTING CIRCUIT

Activated by the starting button on the operator's panel, the starting circuit provides power to start the engine. The starting button closes the starting contactors, used to connect the storage battery to the main generator. Starting contactors consist of coil-operated main contacts, carrying the heavy starting current, and smaller auxiliary contacts, used as interlocks. Those in the generator field circuit close first, followed by contactors in the generator armature circuit. If this sequence were not established, the armature would short circuit the battery when its contactors closed. Interlocks on the contactors control the sequence automatically when the start button is pressed.

The fuel supply system must be functioning and, since lubricating oil pressure does not exist in a shutdown engine, the starting switch or related connections must be interlocked to prevent a fuel shutdown until lubricating oil pressure builds up. The main power controls must be interlocked in an "off" position to stop power flow when the engine fires. Since the voltage of the main generator is too high for the control circuit immediately after firing, the starting circuit must be opened automatically.

1.37. POWER CONTROL CIRCUITS

Control circuits are low-voltage circuits that control the switches necessary for handling the high-voltage power circuits. A typical control circuit is both manually and automatically operated. Power is generally fed through a master control switch from the source. The operating coils in the switches appear next to the negative return line of the control circuit. The intermediate equipment between the control switch and the operating coils consists of manual controls, automatic controls, and interlocks which determine when the switches are energized.

1.38. TRANSITION

In an automobile, gears enable you to vary your use of the power being put out by the engine; for example, they make it possible for you to go up steep hills at a slow speed. But gears large enough to give the same effect on a locomotive would be much too large to be practical. Another method is used. Called transition, it is varying the power put out by the generator.

The amount of current required by the traction motors constitutes the load for the generator. By controlling the generator

field, power taken from the engine can be regulated: increasing the field current increases the power delivered by the locomotive; decreasing the current decreases it. Connecting the motors in parallel is one of the two main methods of transition in the diesel-electric locomotive; the other is shunting off part of the current drawn into the circuit, forcing more current to be drawn from the generator to replace it.

Transition, then, is accomplished by changing traction motors from series connection to series-parallel or parallel connection, or by closing field shunting circuits to weaken the traction motor fields.

When motors are connected in series, the same current flows through each motor and the generator voltage is impressed on the entire group of motors, resulting in a comparatively low voltage for each motor. If the connections are changed to put motors in series-parallel or parallel with each other, higher voltage is impressed on each motor resulting in a corresponding increase in power output of the generator. When the fields of a series motor are shunted, only a portion of the current continues to flow through the fields. This weakens the field and the counter-voltage, or back emf. This is equivalent to lowering the resistance of the circuit and results in an increased flow of current. Increased current in every instance increases the torque, the tractive effort, and the power drawn from the generator; and a balanced condition for voltage, current, and tractive effort is reached at progressively higher speeds.

Hand-operated transition controls are in use but transition is usually automatic. When original connections are made in the opposite sequence as speed decreases, the process is called backward transition.

1.39. DYNAMIC BRAKING

Braking with brakeshoes puts wear on both the shoes and the wheels, and the friction of the shoe pressing against the wheel causes extra heat. In dynamic braking, these disadvantages are eliminated. While the locomotive is coasting to a stop, the engine-man can use the traction motors as generators to slow the locomotive's speed without using the brakes. During dynamic braking, traction motor connections are changed; the motor acts as a generator sending its current to resistors that dissipate the energy into the air. The amount of braking is regulated by changing the field excitation of these traction motors; controls are built into the throttle and reverse levers.

The dynamic braking system is independent of the airbrake system, which may also be used on the train. Military diesel-electric locomotives are not equipped with dynamic braking; they use only the airbrake system.

1.40. PNEUMATIC CONTROL SWITCH

When emergency brakes are applied or under similar conditions, engine power is reduced by a pneumatic control switch that opens when the brake pipe pressure is reduced. The opening of the switch stops the engine, stops the fuel pump, and turns on indicating lights. When the throttle is returned to idle and the brake pipe pressure is restored, the switch resets itself.

1.41. LOCOMOTIVE CONTROLS

Most of the electrical equipment on the locomotive is mounted in a centrally located cabinet. The operator's control station is located in the cab, shown as item 8 in figure 1.1. Locomotive movement is directed by a series of controls: throttle, reverse and transition levers, automatic and independent brake valve handle, transition forestalling switch, and control switch.

a. Throttle lever. The throttle controls the speed of the diesel engine and, consequently, the power delivered to the traction motors. If a throttle functions through an electropneumatic or electro-hydraulic governor, it is called an electric throttle and must be connected electrically to the governor; one that functions through the air system is called a pneumatic throttle and must set the governor through a pneumatic actuator. Some locomotives have a mechanical linkage between the throttle and governor.

(1) A typical electric throttle has seven or eight running positions in addition to "stop" and "idle." As the throttle lever is moved through its operating range, various electrical connections are made between the low-voltage control lines and the solenoids in the governor. Fingers, making sliding contact with segments on a rotating drum or cylinder in the throttle, determine the fuel setting of the governor. The throttle is also interlocked mechanically with the reverser and with the transition lever if transition is controlled manually. These features ensure the opening of the main power switches when necessary during various stopping and reversing operations.

(2) A pneumatic throttle is equivalent to a pressure regulating valve. Responding to the pressure established by the throttle, a pneumatic actuator determines the fuel setting of the governor. A pneumatic throttle has auxiliary contacts similar to those of the electric throttle for sequence and interlocking features. In multiple-unit operations, an air line furnishing air pressure equal to the control reservoir pressure is required between the units.

b. Reverse lever. The reverse lever controls magnet valves in the reverser, which turn the drum to change the connections of the traction motor fields. This lever must not be moved when the locomotive is moving because circuits may be shorted. If the locomotive is unattended, the lever should be taken off of the control stand in order to interlock the controls in an inoperative position. A seven-position reverse lever, sometimes called a controller, is used on many manually controlled transition-type locomotives, instead of a transition lever.

c. Transition lever. Ordinarily, a transition lever is provided on locomotives having manually controlled transition. It may also be installed on locomotives having automatic transition in order to control circuits during multiple-unit operation with locomotives having manual transition. A braking position, for dynamic braking, is sometimes provided. Because of the definite relationship between current and speed, the proper step of transition is usually indicated on the dial of the load ammeter or speedometer.

d. Automatic brake valve handle. The automatic brake valve controls the operation of brakes on the locomotive and on the cars when they are properly connected. The independent brake valve controls the operation of brakes on the locomotive only.

e. Transition forestalling switch. A transition forestalling switch on the control panel is used to prevent undesired forward transition on automatic equipment. Backward transition is determined by the operation of a backward transition relay, or by reducing the throttle to the idle position.

f. Control switch. A switch, usually called the control switch, connects the control circuits to their source of power. All controls except those for the locomotive lights and, in some models, the engine starting circuit are normally fed through this switch, or through interlocks whose setting is dependent on this switch. It is, therefore, equivalent to a master switch for locomotive controls on both the leading locomotive and on any trailing locomotive to which the controls are connected in multiple.

1.42. MULTIPLE- UNIT EQUIPMENT

When locomotives are connected but their power systems remain independent, the process is known as doubleheading. However, if electrical connections are made and all locomotives are controlled from one cab, it is called multiple-unit operation. Equipment for connecting units in multiple consists of a jumper with the following control wires: control switch, forward-reverse control, throttle, sanding, and alarm and indicating circuits, and emergency shutdown switches. The wires are connected to a plug which is keyed in such a way that it can be inserted in the end receptacle of the locomotive in the correct position only. The locomotive from which operation is controlled is called the leading unit and the others trailing units. On all trailing units, engines are started and battery switches closed before operation begins.

1.43. AUXILIARY POWER SYSTEM

The auxiliary generator is used to charge the storage battery and to power the low-voltage circuits for lighting, control equipment, fuel pump motor, and field excitation. It may be driven by belt or gear from the shaft of either the engine or the main generator and is usually mounted on the generator's frame. The auxiliary generator assumes the load after the battery has supplied power for starting the engines.

A breaker-type switch or a fuse disconnects the auxiliary generator; if this switch or fuse is open, the battery must supply all low-voltage requirements. Many locomotives also have an auxiliary generator field switch; it is opened when the locomotive is shut down and kept open until after the engines are started again. On locomotives having both these switches, the field switch is in the equipment cabinet.

a. Voltage regulation. The auxiliary generator output is regulated by changing the strength of the auxiliary generator field; if the speed of the auxiliary generator increases, the shunt field strength must be decreased to maintain a constant voltage. A regulator may consist of a small torque motor or of relays which are sensitive to changes in voltage. The movement of these elements changes the resistance in the field circuit. The operating principle of the voltage regulator is that the voltage generated is proportional to the shunt field strength. The voltage regulator increases the resistance of the field, thereby reducing the flux. If such external conditions as generator speed, load, or internal shunt field

resistance cause a change of torque on the torque motor armature, the armature will move the sectors in such a direction as to cut short field resistance in or out and re-establish the set voltage at the same voltage for every position.

b. Battery system. The storage battery supplies power for cranking the engine and also to supply power to the control and lighting circuits before the engine is started. After the engine starts, these circuits draw on the auxiliary generator. The battery is beneath the underframe, beneath the cab floor, or in the compartment next to the cab. A switch in the equipment cabinet or on a nearby panel connects the battery to the auxiliary generator and control circuits. The battery ammeter indicates the rate of charge or discharge of the battery; it should indicate zero or various charge readings when the engine is running. As soon as the engine is cranked, the auxiliary generator starts to restore the current and the ammeter should register a charging current until the battery is charged. The battery may also be charged from shop circuits or terminal yard circuits through external charging receptacles. When the engine is shut down or if the auxiliary generator voltage drops too low to charge the battery, a reverse current relay opens a battery contactor between the auxiliary generator and the battery, preventing the battery from discharging back into the auxiliary generator windings.

1.44. SUMMARY

Measures of electrical pressure, resistance, and quantity are called volts, ohms, and amperes. A volt is the unit of pressure leaving the generator or battery; an ohm is a unit of resistance; and an ampere is the unit used to measure power available to the receiving mechanism, such as one of the traction motors. Ohm's law states the relationship between these: current equals voltage divided by resistance. Voltage is measured by a voltmeter and amperage by an ammeter.

Wiring diagrams, using lines and standardized symbols and abbreviations, are used in tracing circuits and locating troubles on diesel-electric locomotives. Wiring in the electric system is built to carry a specific load of current; current heavier than that specified is called an overload. Since an overload in the wiring can harm equipment, fuses and circuit breakers are provided to break the circuit before damage occurs.

Mechanical energy can be changed into electrical energy, or electrical into mechanical, by a dynamo. If the mechanical energy

is changed into electrical, the dynamo is called a generator; if the electrical energy is changed into mechanical, the dynamo is a motor. A generator can be either the alternating-current or the direct-current type. Current is set up in the generator's armature coil whenever the coil cuts across the lines of magnetic force between the generator's poles. With an alternating-current generator, the current flows through the coil first in one direction then the other unless the generator has a commutator to turn the alternating current into a direct current. If a generator has many coils, connected to form a closed circuit, a direct current is supplied. Direct current generator coils can be connected in series, in shunt, or in a combination of series and shunt. Like a generator, a motor can a also be connected in shunt or in series. Traction motors are series-wound, direct-current motors and are provided with a shunt. Their function is to convert electrical energy from the generator into mechanical force to turn the locomotive wheels.

Because of the locomotive's size and weight, gears large enough to control it would be too large and bulky to be practical. Mechanical gear transmission of power to the wheels is therefore replaced by electrical transmission. To change the mechanical force from the engine into electrical power, a generator is operated by the engine's crankshaft. Wires from the generator transmit the power to traction motors and the traction motors turn the wheels.

Electrical circuits in the locomotive are connected in series, in parallel, or in series-parallel, a combination of the two. Circuits are opened and closed by contactors, operated either by compressed air in heavy circuits, or by current from the battery in circuits where the current is low. Auxiliary switches to control the connecting or breaking of circuits are called interlocks. A relay is a device that changes connections in one part of a circuit in response to changes taking place in another part. Changing traction motors from series connection to series-parallel or parallel connection is known as transition. It can be done by connecting the motors in parallel or by shunting off part of the current drawn into the circuit, forcing more current to be drawn from the generator. A traction motor cutout switch is used to take the motors out of circuit if there is an electrical failure.

In dynamic braking, the locomotive's wheels are used to drive the traction motors which, acting like generators, slow the locomotive's speed without causing wear of the wheels. When brakes are applied, a pneumatic switch stops the engine, stops the fuel pump, and turns on indicating lights.

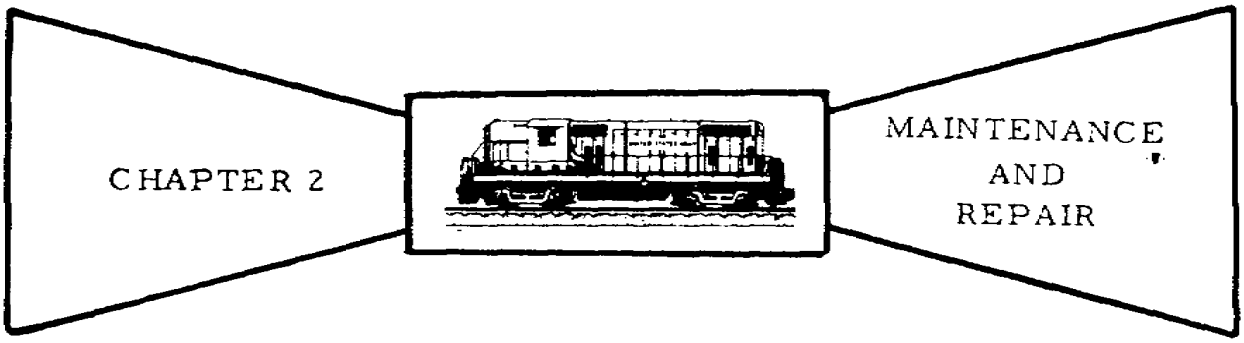

2.1. INTRODUCTION

The four categories of maintenance are organizational, direct support, general support, and depot. Organizational maintenance is that authorized for, performed by, and the responsibility of a using organization on equipment it possesses. Direct support maintenance is that authorized and performed by designated maintenance activities in direct support of using organizations. This category is limited to repairing end items or unserviceable assemblies in support of using organizations on a return-to-user basis.

General support maintenance is that authorized and performed by designated table of organization and equipment (TOE) and table of distribution (TD) organizations in support of the Army supply system. Normally. TOE and TD3 organizations repair or overhaul materiel to required maintenance standards in a ready-to-issue condition based on applicable supported army area supply requirements. Depot maintenance activities, through overhaul of economically repairable materiel, augment the procurement program in satisfying overall Army requirements and, when required, provide for repair of materiel beyond the capability of general support maintenance organizations. Appropriate technical manuals cover each category of maintenance. For example, organizational maintenance instructions for diesel-electric locomotive, model MRS-1, are given in TM 55-2210-201-20.

Since diesel engines range from about 59 to around 2,590 horsepower, the servicing of these engines varies a great deal. The engine maker's service books and instructions and the pertinent technical manual should always be available to service personnel and referred to before any repair work is attempted.

Service schedules are usually worked out according to a locomotive's mileage or to its hours in service. Hours in service is probably the best guide for such servicing as tappet adjustment or changing oil filters or oil, while mileage is a good guide for the

spacing of major overhauls. The time between inspections depends upon the quality of fuel and lubrication; frequency of cold starting; engine design features; atmospheric conditions of temperature, dust, and humidity; and the load on the engine. Loads of less than 50 percent maximum engine output for extended periods will increase engine maintenance.

This chapter explains the checking, lubrication, and other general maintenance of commonly serviced parts of the locomotive. Following the pattern of chapter 1, maintenance of mechanical parts is discussed in section I and maintenance of electrical parts in section II. Troubleshooting is discussed in section III.

Section I. Mechanical Maintenance and Repair

2.2. GENERAL

Certain parts of the engine are repaired and others are replaced because they become worn. The engine maker usually lists the expected life of each part in either miles or hours of operation. Components subjected to continuous wear include cylinder liners, pistons and piston rings, valves, valve springs and guides, bushings, injectors, timing gears, camshaft, rocker arms, crankshaft, parts of the governor, and parts of the fuel, lubricating, and water pumps. A regular check should be made of the crankshaft, the most costly part of the engine. Crankshaft distortion, caused by misalinement of the bearings, should not exceed 2 to 3 thousandths of an inch.

Auxiliary equipment, such as the traction motor blower, belts, water pump, fuel pumps, and the various control switches, relays, and protective devices, should be removed for cleaning, calibration, adjustment, or replacement with completely reconditioned units during scheduled periodic inspections. Fuel, water, and steam lines should be cleaned periodically and all valves inspected and repaired.

The following paragraphs tell the procedures used in maintaining these and other parts of the locomotive. As usual, manufacturer's manuals and the appropriate technical manuals provide the most complete instructions for maintenance and repairs and the instructions given here are minimal.

2.3. PISTON AND CONNECTING ROD

Following procedures given in subparagraphs a and b, remove and inspect cast aluminum pistons and connecting rods at 75,000 miles and forged aluminum ones at 85,000 miles. Repair as

necessary. Piston and connecting rod assemblies of locomotives used for switching may require more frequent repair.

a. Pistons. Before pulling the piston, remove any ridge on the liner with a reamer. Gaps of rings can be measured most accurately while holding them in place in the liner. After the piston is removed, clean any chips out of the crankcase. Clean pistons and inspect them for defects; replace first and second compression rings. Examine piston pin and bearing for wear, cracks, or chips.

b. Connecting rods. Clean and inspect connecting rods, making certain that oil passages are open. Replace any defective rods. Examine connecting rod studs, bolts, and nuts. If piston seizure occurs before removal of connecting rod stud or bolt nuts, remove cotter pins and check tightness of nuts to determine if bolts have been stretched. If they are stretched, they are not safe for further use.

2.4. BEARINGS

Never force bearings or bearing shells as the bearing face may be scratched or the shell distorted. Note the identification mark on the shell so that it can be replaced correctly. Bearings should always be replaced in the same shells because their locations can determine how they are worn.

To remove bearing shells, take off the crankcase doors opposite the shells to be removed and rotate the engine so that the skirt of the piston in the opposite bank of cylinders has completely entered its liner. Unscrew the connecting rod nuts and bolts, taking out the cap with its bearing. Tap the cap from the rod. Figure 2.1 shows the bearing shells removed and disconnected so that the bearings can be removed.

After bearings are replaced, examine grooves and oil holes to make sure that these passages are free of obstruction. Always make a running test before releasing the assembly for service. Idle the engine a few minutes and then feel the bearing shell. If it is hot, smooth the high spots on the bearing and repeat the test. With a switching locomotive, a test should be made consisting of light switching duty for the first 8 hours followed by an inspection of the bearings at the end of the test.

Inspection and maintenance procedures for bearings in general can be illustrated by those for bearings of the connecting rod, crankshaft, axle, and journal.

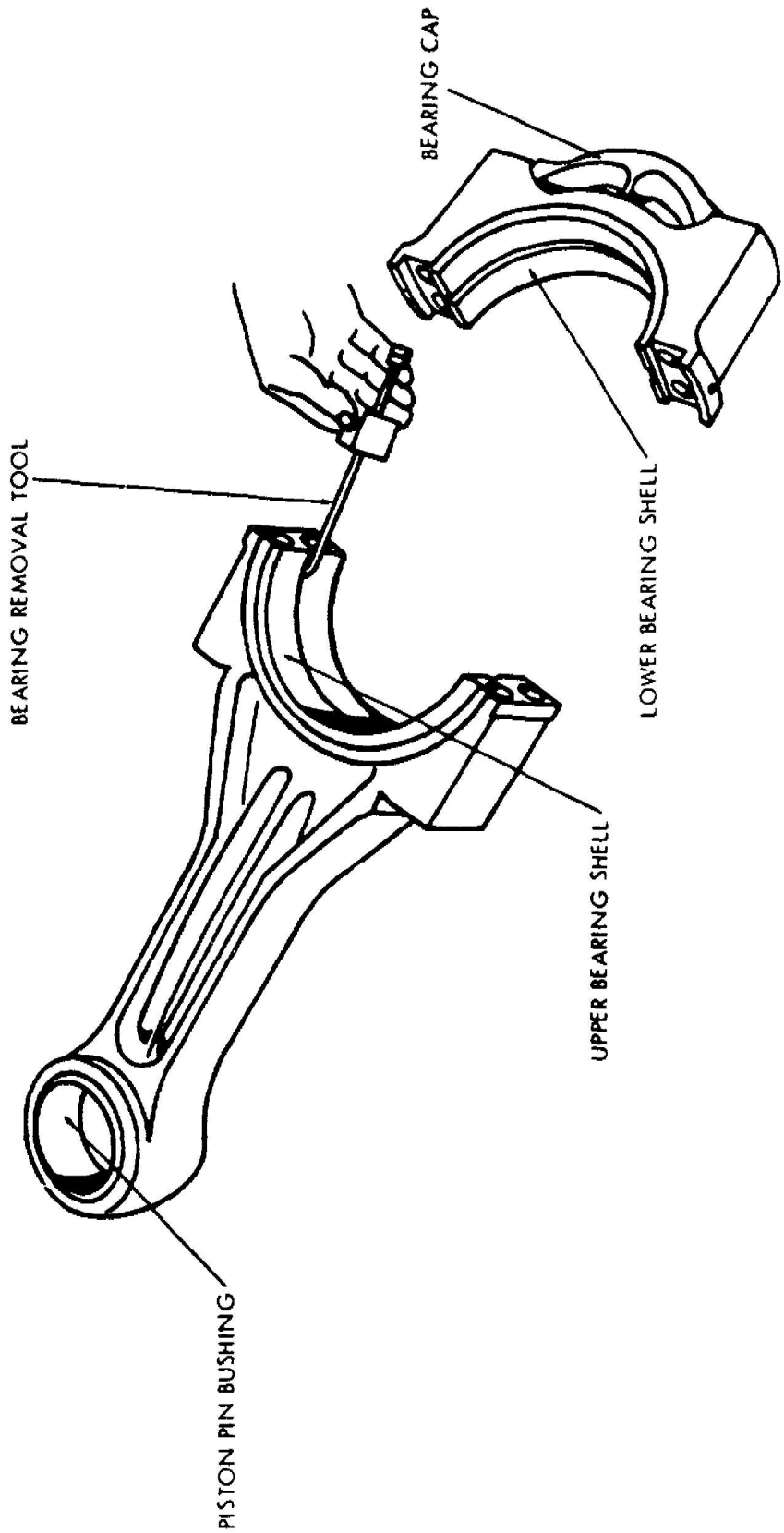

Figure 2.1. Bearing Shell Removal.

a. Connecting rod bearings. Periodic inspection of connecting rod bearings can be made without removing the piston and connecting rod assembly; this is done by blocking the bearing and backing the shaft away from the shell.

When the connecting rod assemblies are removed, inspect the face and fillets of the crankshaft journal for scored condition. If the crankshaft journal is found scored in the bearing area, smooth off all irregularities by stoning with a fine grit stone. Do not stone lengthwise or use a file. Check to see that the crankshaft is not out of round; then clean all parts.

Be sure to line up the oil holes when the connecting rod bearings are replaced. In place, they must have proper clearance on the crankshaft journal. Their clearance should be 0.001 inch per inch of crankshaft diameter, unless otherwise specified; their thrust must be parallel with respect to the crankcheek or adjoining bearing and they must be free to move laterally with the crankshaft in any angular position. Connecting rod bolts should be tightened to the torque specified by the manufacturer or to proper bolt elongation or stretch.

b. Crankshaft bearings. Under normal conditions, crankshaft bearings receive lubrication by the forced lubrication system built into the engine, and proper bearing alinement is assured by the rigid engine frame and method of mounting. However, misalinement may occur if one or more bearings are permitted to wear unduly. If a bearing becomes low, the span will be increased between the bearings supporting the shaft and this will introduce heavy stresses in the crankpins; if the condition is permitted to continue, it will result in a crankshaft bearing failure.

Crankshaft bearings can be checked in several ways; one method follows. Locate crankpin at upper dead center and force the shaft down to a firm seat in the bearings. After removing the valve levers, connect an air hose to a T at the indicator cock connection. Provide a pressure gage on the cylinder head side of the T. Lock flywheel from turning and maintain air pressure in the cylinder at 125 pounds or more by regulating the valves located on the inlet side of the T. Measure distance between gage points on crankcheeks with micrometer or strain gage; then after locating crankpin at lower dead center, again force the shaft into the bearings. Measure distance between gage points for the two opposite horizontal positions; do not use air pressure in the cylinder. When the bearings are in line, all measurements will be the same.

In most diesel engines, the top bearing shell is removable with the top cap and the lower shell is rolled out of or into position by the crankshaft. Unless bearings are at opposite ends of the engine, they should be removed one at a time in order that the crankshaft may be held in position. The shell should be rolled out of and into position with the same directional rotation of the crankshaft.

Crankshaft bearing failures often are caused by the shaft's misalinement or flexing. This condition in turn can be traced to a low or misalined bearing resulting from a loose or distorted bearing support or cracked engine frame. Bearing supports should be tight and in perfect alinement before a shell is installed.

When checking the wear on a bearing, measure shell thickness with a micrometer at both sides, at the bottom, and at any other points showing wear. If any number less than a complete set of bearings is renewed, the shells applied must be scraped with a fine grit stone to within 0.001 inch of the same thickness as the adjoining bearings or of the old shell. After the new shell is sized properly it should roll into place freely. When installing a complete set of main bearings, roll a shell out from one end of the engine and install a new one; then replace the shell at the opposite end of the engine. In this manner the crankshaft is kept in place while intermediate bearings are being changed and less force is necessary in rolling in the shells.

With all the shells in place and the caps tight, rotate the shaft by hand to make sure that it is free. After the engine is reassembled, idle it under its own load for a few minutes in order to locate any friction. Then stop the engine and remove one shell at a time and scrape if necessary. Continue this operation until all shells show a good bearing.

c. Axle bearings. Typical axle bearing maintenance involves checking the oil depth: 1 3/4 inch minimum, 3 1/2 inch maximum, measured on slant. Change any glazed packing, making sure that it is packed tightly against windows and axle. Use a suction pump to take a sample of oil from the bottom of the chamber and check it for water. If water is found, withdraw the oil and repack the bearings with fresh packing. Bearings normally require repacking every 25,000 to 30,000 miles of service or every 6 months, whichever comes first.

To pack axle bearings, first empty and clean out the packing chamber. The axle caps are fitted with a spring packing pusher; insert a wedge between the pusher and the axle to keep the spring

compressed while the bearing is being packed. Saturate all the packing to be used with warm oil for 24 hours and allow it to drain for 12 hours at a temperature of approximately 85° F. so that the oil will not congeal. Fill the bearing with lubricating oil; then open the oil well cover and gage the depth of the oil. If the bearing is not sufficiently full, pour oil into the auxiliary oil well until the proper depth of oil is reached: 3 1/2 inch maximum measured on slant.

d. Journal bearings. All parts of the journal box are interchangeable when new. After the parts in the assembly operate together for a long time, each part wears to fit adjoining parts. For example, if during manufacture a slight irregularity were left on one part, the adjoining part would, after a while, wear to conform to the shape of the irregularity. For this reason, a journal box and bearing should be treated as a unit and used only on the journal to which it belongs. The bearings are usually made of an alloy of tin and copper called babbit metal.

A journal bearing and thrust bearing can be removed in the following manner: remove the waste from the journal box and jack the box high enough that the locomotive's weight is not resting on the journal bearing; remove spring caps, gaskets, lateral springs, and wedge from top of journal bearing--hold the thrust bearing so that it will not fall while the springs are being removed; insert bolt in the hole in the front side of the bearing and pull out. If the waste is dirty, replace it with a clean oil-soaked waste pad.

2.5. V-BELTS

Correct tension should be maintained on a V-belt. If a belt is too loose, it will slip and cause both the sheave and the belt to wear and the engine to overheat; if it is too tight, bearings are subjected to overload and will wear rapidly. Belt tension may be checked by depressing the V-belt in the center. The amount of deflection will vary somewhat due to the variation in drive center distances, but usually the proper deflection will run from 1/2 to 1 inch. The pressure exerted at the center of the belt to check this deflection should be the normal pressure you can exert with one finger without straining.

Whenever a set of belts is being applied, the center distance of the drive must be reduced so that the belts can be placed over the sheaves freely. If this were not done, it would be necessary to force the belts into the sheave grooves, causing ply breakage and cover damage and resulting in shortened service life for the belts. Check

pulley alinement after belt tension is adjusted, since movement of the equipment will cause undue wear on new belts.

After a set of V-belts has been applied, the drive should be run for at least 15 minutes, allowing the belts to stretch, become well seated in the grooves, and equalized on both sides of the drive before they are checked for tension and correct matching. After the belts have made this preliminary run, check the belt deflection; it should be about 1 inch at midspan. Run the drive at top speed, checking the driven pulley speed with a hand tachometer; if it falls within 5 percent of calculated speed, the belts are tight enough. If, however, the driven pulley speed cannot be brought up to rating, check the wear condition of the sheaves since sheaves that are badly worn may not deliver the proper speed.

To find the speed of the driven pulley, use the following formula:

Speed of driven pulley = diameter of driving pulley x
speed in revolutions per minute
+ diameter of driving pulley.

The same formula is used for flat belts as for V-belts.

2.6. ALINING SHAFTS

If two or more rotating shafts are coupled, proper alinement should be provided to eliminate vibration and bending of the shafts. The method of securing satisfactory alinement will vary with the number of bearings on each shaft and the type of coupling used. If shafts with single bearings are alined properly, there will be no radial displacement between the coupled ends and no angular displacement of shafts. If each shaft to be coupled has more than one bearing, a type of coupling must be used which will permit a small amount of radial or angular displacement since it is not always possible to achieve absolute alinement between two shafts carried in separate housings.

a. Radial misalinement. When the centers of the two shafts do not coincide, radial misalinement occurs. The displacement, illustrated in figure 2.2, causes excessive vibration and wear within the coupling because of radial movement of the two halves of the coupling with respect to each other. This displacement also causes pulsating loads on the bearings, shortening their life.

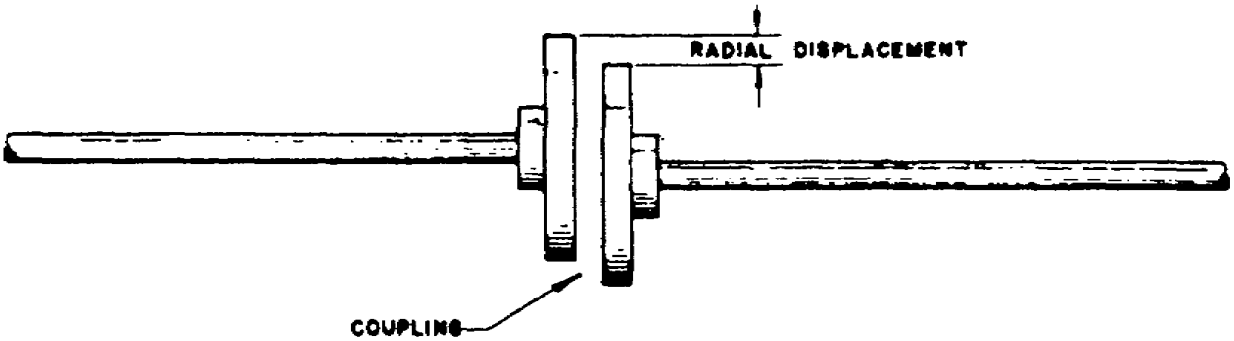

Figure 2.2. Radial Misalinement.

b. Angular misalinement. When the two shafts come together at a slight angle, angular misalinement, illustrated in figure 2.3, is present. In addition to setting up vibration, such misalinement causes bending stresses to be set up in the shafts and results in additional bearing loads. The more flexible the coupling, the less will be the load on the bearing and the less stress will be set up in the shaft.

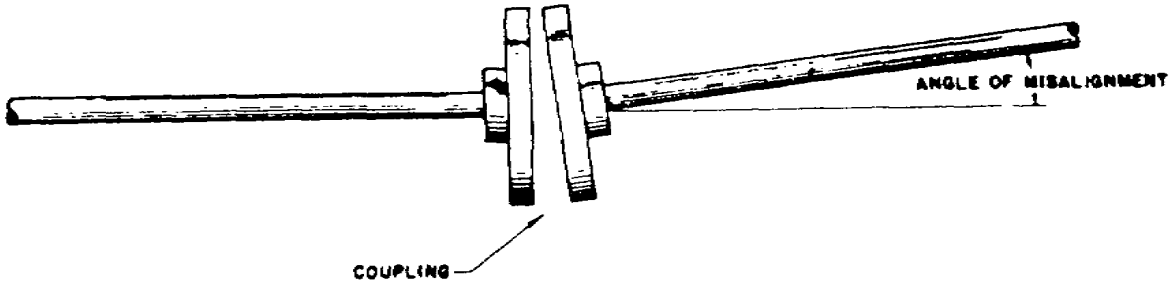

Figure 2.3. Angular Misalinement.

2.7. TRUCKS

Clean and lubricate trucks as required by maintenance schedules and lubrication orders. When inspecting trucks, check main castings, pedestal liners, and swing hangers for damage or wear; bolts, nuts, and other fittings for tightness; center plates and side bearings for excessive wear; and springs for weakness, cracks, or broken leaves. In addition, test equalizers with a magnetic tester.

Maintenance of wheels and axles and of journal boxes is a little more detailed, involving more than a routine check for wear.

a. Wheels and axles. Wheels and axles may have to be turned or renewed. If the wheels are to be renewed, remove them and the axles and test them by the magnetic method. Repair motor

mounting and axle bearings and caps and inspect axle gear. Clean and lubricate brake cylinders, check slack adjusters, and inspect and repair the complete airbrake equipment.

Jacking pads are provided on the body of the locomotive to support the locomotive frame when raising it from a truck. To remove a wheel and axle assembly without removing the truck, use a drop table. Give axles and axle gears nondestructive inspection, magnetic particle preferred, each time wheels are removed. If the second pair of wheels is worn to its condemning limit but the axle and axle gear are free of cracks or defects and the gear is not to the condemning limits, new wheels may be applied using the same axle and axle gear. If the axles are not inspected at each wheel removal, it is recommended that the axle be scrapped after two pairs of wheels have been worn to their condemning limits. Axle gear, if not subjected to nondestructive inspection, should not be used beyond the life of two axles. When a pair of new wheels is to be mounted on an axle, the wheels must be carefully mated with a maximum variation of 1/16 inch in circumference, or 0.020 inch in diameter. If new wheels are not available within these limits or variations, or if old wheels are to be used, they should be matched as closely as possible and turned or ground after mounting. Wheel mounting pressures referred to in the following table are used when pressing wheels on axles.

Wheel Mounting Pressures in Tons

Minimum and Maximum Pressure Limits are Absolute--
No Tolerance Permitted

Journal size	Nominal wheel seat diameter, in.	Wheel mounting pressure			
		Cast iron wheels		Steel wheels	
		Minimum tons	Maximum tons	Minimum tons	Maximum tons
3 3/4 x 7	5 1/8	30	55	50	70
4 1/4 x 8	5 3/4	35	60	55	80
5 x 9	6 1/2	40	65	70	100
5 1/2 x 10	7	45	70	75	110
6 x 11	7 5/8	50	75	80	120
6 1/2 x 12	8 1/8	--	--	85	130

b. Journal box. Before repacking a journal box, clean it and examine it for cracks that might leak oil. Saturate the new packing* in oil at a temperature of not less than 70° F. for at least 48 hours. When the packing is sufficiently drained, oil should not drip from it but should flow from it when squeezed. Stored packing must be kept in tight containers so that it won't dry out.

2.8. AIRBRAKES

Before each trip, check the brakes to insure that air compressors are providing enough air for the expected service, pressure-regulating devices are working properly, brake valves are working in all positions, and water has been drained from the airbrake system. Locations of some of the airbrake valves and gages are shown in figure 2.4. Wear or damage to brake rigging should be corrected immediately and brake cylinder piston travel should be set in accordance with standard operating practice. Adjustment is usually necessary when travel exceeds 2 inches for each piston. When levers, pins, and bushings have worn until brake travel can no longer be taken up by turnbuckle adjustment, the brake pull rod may be shortened by moving the pin to the second hole in the rod. When it becomes necessary to move the pin to the third hole, all parts should be replaced. Check the following parts: piston and non-pressure head assembly, piston lubricator, release spring, strainer, cylinder, and valves.

a. Piston and nonpressure head assembly. Clean the piston and nonpressure head assembly with a hydrocarbon cleaning fluid unless otherwise specified. If there are any cuts or deep scratches on the packing cup bearing surface or if it is worn so that it does not hold a proper bearing surface on the cylinder wall, replace it. When applying the packing cup to the piston, hold one side away from contact with the piston to allow air to escape from under the packing before snapping the cup into place. This prevents an air pocket from forming between the packing and the piston head which might cause a bad fit of the packing on the piston.

b. Piston lubricator. Before replacing or reapplying the packing cup, clean the felt swab of the piston lubricator by brushing it and relubricate it by soaking the unit in oil. If the swab does not have full contact with the cylinder, adjust it to provide proper contact.

* Lubrication pads, approved by the Association of American Railroads, are used for packing journal boxes. They come in sizes 5 x 9, 5 1/2 x 10, 6 x 11, and 6 1/2 x 12 inches.

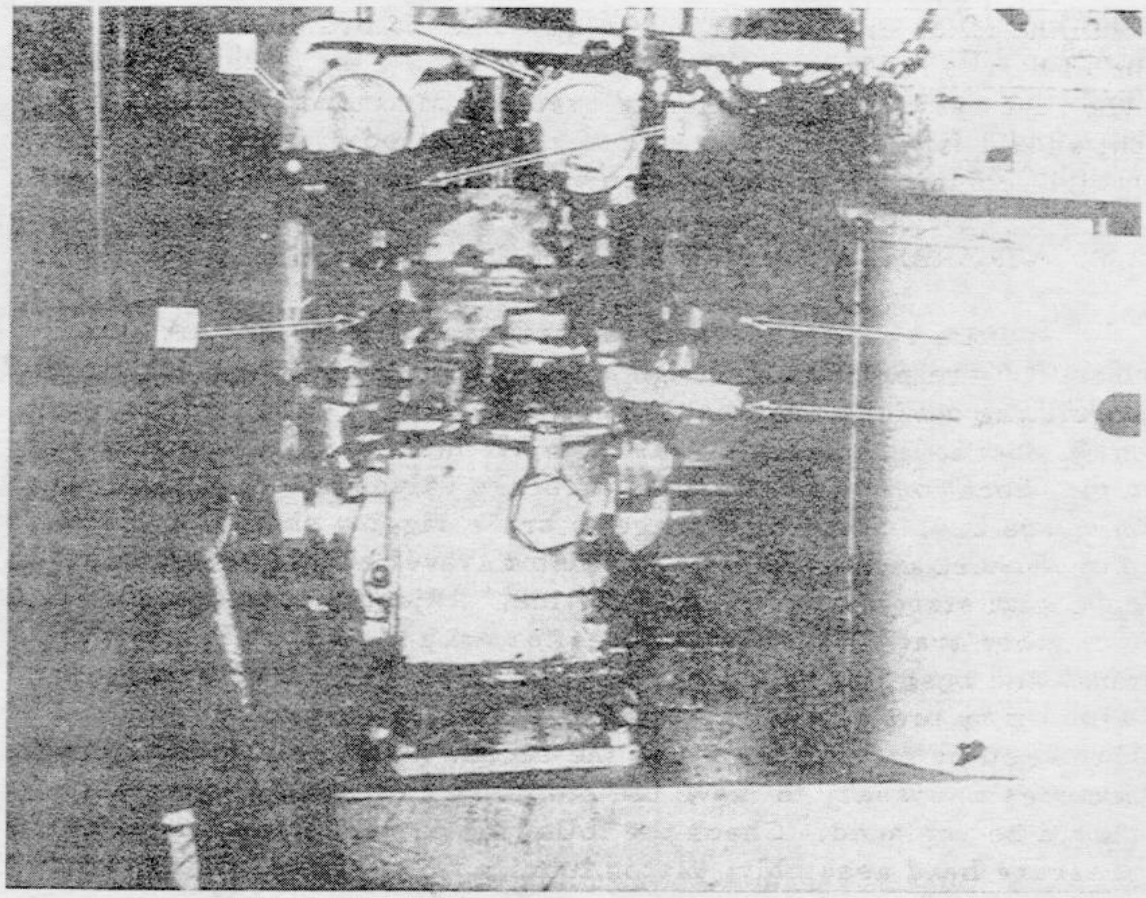

1 BRAKE CYLINDER AND BRAKE PIPE PRESSURE GAGE
2 MAIN RESERVOIR AND EQUALIZING PRESSURE GAGE
3 AUTOMATIC BRAKE VALVE
4 BELL RINGER CONTROL VALVE
5 INDEPENDENT BRAKE VALVE
6 SANDER CONTROL VALVE

Figure 2.4. Airbrakes.

c. Release spring. If the release spring shows any dirt or rust spots, clean it and give it a coating of approved rust preventive; if it is not cleaned, dirt or rust might get on the cylinder walls.

d. Strainer. The strainer can be removed from the inside of the nonpressure head by removing the snapring holding it in place. By then removing the nonpressure head, the felt swab can be inspected and replaced if necessary.

Brush the hollow rod packing felt to remove the surface dirt; then recondition it by soaking it in solvent. Soak the strainer seal in oil and drain it.

e. Cylinder. Completely coat the hollow piston rod with a standard brake cylinder lubricant and apply the release spring, felt

lubricator, and nonpressure head, using the same holding fixture as for dismantling. Before applying the reconditioned piston and non-pressure head to the cylinder, clean the cylinder walls and lubricate them with a good grade of brake cylinder lubricant. If the nonpressure head gasket is in good condition, do not replace it; simply clean the gasket face.

f. Valves. Clean, repair, and relubricate valvular parts of the equipment at regular intervals; do not dismantle them while on the locomotive; rather remove and take them to a shop equipped for proper cleaning, repairing, and testing.

Clean the dismantled valves and valve assembly with a hydrocarbon cleaning fluid and dry them with air or a clean cloth. Soak felt lubricator parts in standard triple valve oil, and drain them. Examine all rubber for wear, cracking, flatness of beads, and other damage. Repair or replace metal parts as necessary. In reassembling, lubricate all friction surfaces except rotary valves sparingly with standard triple valve oil. Lubricate rotary valves and valve seats with an oil having high surface tension characteristics as prescribed in the appropriate reference. The rotary valve of the automatic brake valve can be lubricated between periodic cleanings without removing the entire cylinder assembly portion.

The KM vent valve is equipped with a self-lubricating piston. After cleaning the piston, remove the plug in its center and saturate the felt wick with standard triple valve oil.

Plugs in the oil ports of the independent brake valve self-lapping portion which lead to the felt expander should be removed at regular intervals and the passages filled with standard triple valve oil.

2.9. SANDERS

Sanders are checked before each trip to see that they operate properly and that the jets and the vent port are not plugged. The sand control valve should be checked and cleaned annually or as conditions require. Check the spring and replace it if it is weak. Clean all parts and place a small amount of airbrake oil on the cup washer, O-ring, and composition rubber valve before reassembling.

2.10. FUEL PUMP ADJUSTMENT

The balance of power in the cylinders can be checked by measuring the maximum pressure and exhaust temperature for each

cylinder. Low pressure and high temperature indicate late timing; high pressure and high temperature indicate the injection of too much fuel.

The amount of fuel being injected is checked in the following way: intake and exhaust valves are closed and a swanneck pipe is installed in the place of the pump's delivery pipe and valve. Move the pump rack bar to full-load position and bar the engine around until the fuel stops flowing through the swanneck pipe. The pump is then ready to be tested. Delivery from each pump element is led off to a set of test nozzles which discharge into measuring cylinders. In this way, the discharge from each pump can be measured under working conditions.

a. Fuel flow. To measure the flow of fuel, the number of pump strokes must be known as well as the quantity of fuel for the desired position. A counter measures the number of strokes in either the forward or reverse direction and an adjusting screw indicates the position of the fuel rack. The adjusting screw is mounted in a sleeve which is notched in such a manner that the fixed position of the rack--idle, full fuel, and off--is maintained in the proper relationship. After one of these positions is adjusted, the screw is locked to the sleeve and the sleeve and screw then move as a unit known as the control sleeve unit. Other parts of the equipment provide for proper support, filtering, and return of fuel oil. Filtered fuel is delivered to the injection pump through a flexible hose; relatively constant fuel pressure, 35-40 psi, is maintained by a pressure relief valve. Fuel bypassed by the relief valve is returned to the fuel storage tank.

b. Other checks. After making sure that the injector nozzles are working properly (par. 2.11), check the fuel pump discharge valve and spring assembly. If load speed, timing, and water jacket temperature remain constant, compression and cylinder pressures and exhaust temperatures normally remain constant. Check the fuel pump timing adjustment; if it is not correct, adjust the thickness of the shims to raise or lower the position of pump suction support for the individual pump.

2.11. INJECTION NOZZLES

If defective, an injector nozzle can cause cylinder knock, overheating of the engine, dirty exhaust, and increased fuel consumption with loss of power. Tightness of all the nuts on the injector should be checked since a leakage at this point may prevent injection and allow fuel to drain into the crankcase lubricating oil.

Whenever an injector is replaced, nuts should be left slack until all the air bubbles are out of the pipeline and pure fuel is flowing.

When testing nozzles, be sure the spray is directed away from the engine because oil must not be sprayed into the combustion chambers. Also, if the spray strikes the hands or face, it will penetrate the skin. Tighten the following parts and check them for fuel leakage: holding nut, spring guide holding nut and locknut, fuel lead-off stud, and the nuts holding the injection and overflow pipes to the holder. Some parts of a nozzle are shown in the cut-away sketch, in figure 2.5.

When fuel pipes are installed, they should not be sprung to catch the nut. If pipes do not line up with their connections, they must be bent slightly; clamp the pipes to prevent any vibration. If a nozzle valve sticks, smoky exhaust and engine pounding will occur; locate the defective nozzle by cutting out cylinders in rotation. Opening pressure of injection nozzles can be checked by a testing device that uses a spare pump to develop the injection pressure as follows:

Attach spare pump to the injection tube on the test rack. Set the fuel pump rack at 20-mm travel. Test the nozzle by pumping the lever steadily until fuel discharges, and note the pressure indicated on the gage. The maximum pressure noted on the gage at each stroke is the opening pressure of the nozzle. Do not operate the lever quickly as this will cause extremely high pressure to build up, giving an unreliable gage reading. Turn the pressure adjusting screw on top of the nozzle holder until the manufacturer's pressure specifications are met. After setting the pressure of the nozzle, set the fuel pump rack at the limit of its travel and operate the test rig to see if the nozzle operates properly.

2.12. LUBRICATING SYSTEM

If oil is changed and filters are replaced according to appropriate lubrication orders or maintenance instructions, it isn't necessary to flush the lubricating system. It may be necessary to flush the system, however, when replacing detergent oil with another brand of detergent oil or when replacing mineral oil with a detergent oil. It is necessary to drain and flush the system when metal particles or water are in the oil or when the engine is dirty even after a detergent oil has been used. Flushing oil may be either the regular OE used in the crankcase, if used at a temperature of 150°F. to 200° F., or the OE 10 light grade oil. When using the light OE 10

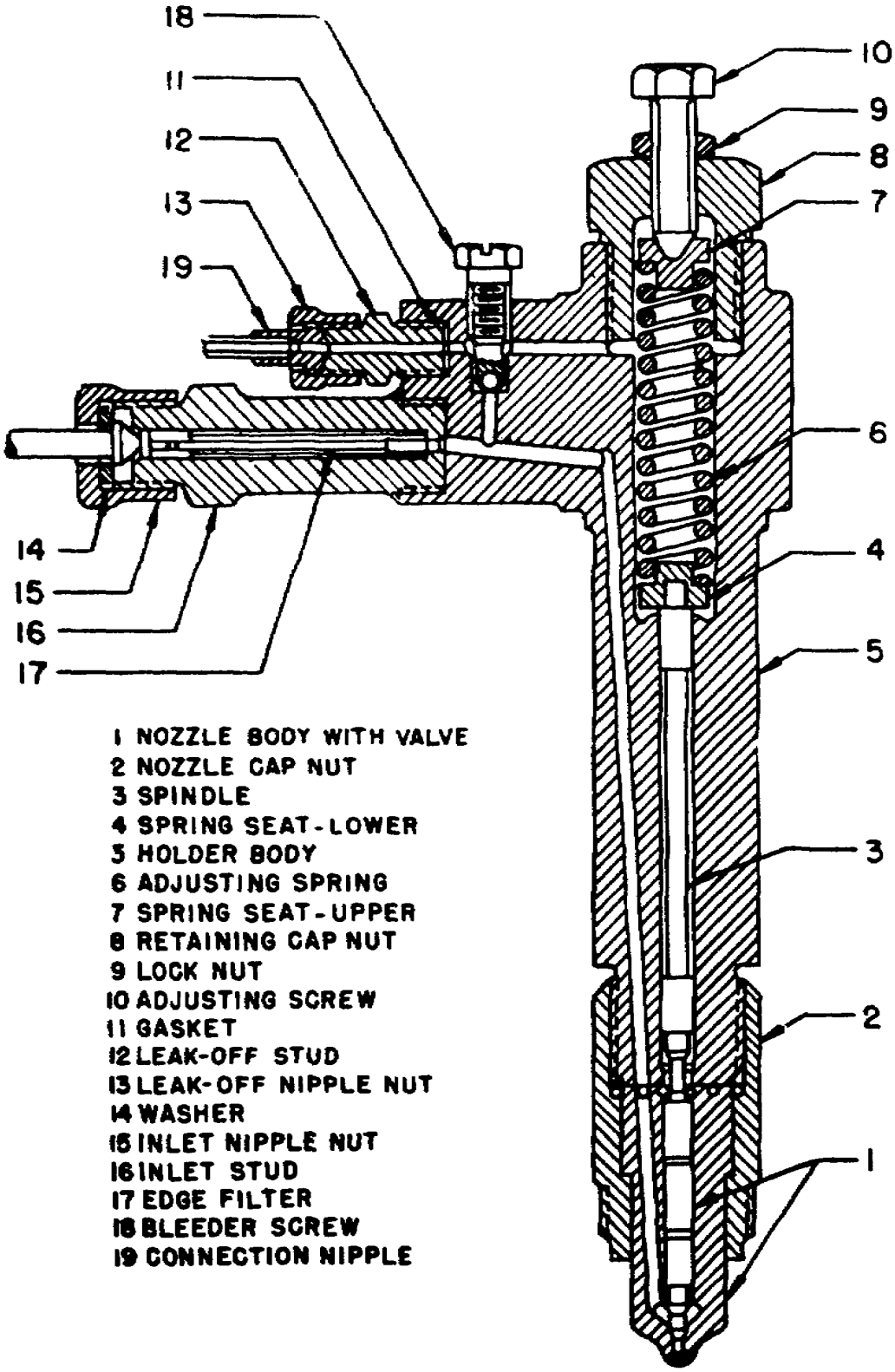

Figure 2.5. Injection Nozzle.

oil, the engine should neither be pulling a load nor idled above a speed of 425 rpm.

Lubrication intervals shown on lubrication orders are based on normal operation and may be reduced or increased to compensate for locomotive use varying from the normal.

2.13. COOLING SYSTEM

All moving parts of the cooling system have to be oiled periodically. Frequent cleaning and flushing of the system can be eliminated by using treated water or distilled water mixed with a corrosion inhibitor. Untreated water causes scale to form and the system must be flushed as follows: (1) flush with clear water until it runs clean; (2) flush with a strong alkaline solution and rinse with clear water; (3) flush with a scale remover and rinse with clear water; and (4) neutralize with a weak alkaline solution.

2.14. AIR SYSTEM

Faulty operation of the air system is most often caused by worn parts or dirty, dry, or worn filters, pistons, and diaphragms. The parts should be lubricated and cleaned as follows:

Clean and oil the air filter. Dry, compressed air should be directed against the filter. Or it can be cleaned with an alkali-free hydrocarbon solvent, dried, dipped in an oil bath, and drained.

Drain condensate from the intercooler, keep the intercooler core sections clean to permit free passage of cooling air, and check the intercooler safety valve manually to be sure it is not stuck. If the intercooler pressure is unusually high, check the operation of the high-pressure suction and discharge valves. If the pressure is unusually low, check the operation of the low-pressure suction and discharge valves. Drain the intercooler every time the main reservoirs are drained. A drain cock is located in the bottom header of each bank of intercooler tubes. When handling the intercooler, be careful to avoid damage to the finned tubing and also to keep from placing undue strain on the header assembly. The top header is one piece while the bottom header is in two pieces to accommodate expansion caused by temperature change. The lower headers are tied together with a bottom tie strap and capscrews; when they are removed the intercooler may be lifted vertically. When handling, replace the strap to keep from distorting the assembly.

An orifice test shows whether an air compressor, shown in figure 2.6, can maintain a specified reservoir pressure while air is escaping through an orifice; pressure varies with the dimensions of the orifice and the speed of the compressor. A condemning limit is usually set at approximately 80 percent of the capacity of a new compressor. The compressor should be reconditioned if air escapes from the orifice faster than it can be pumped.

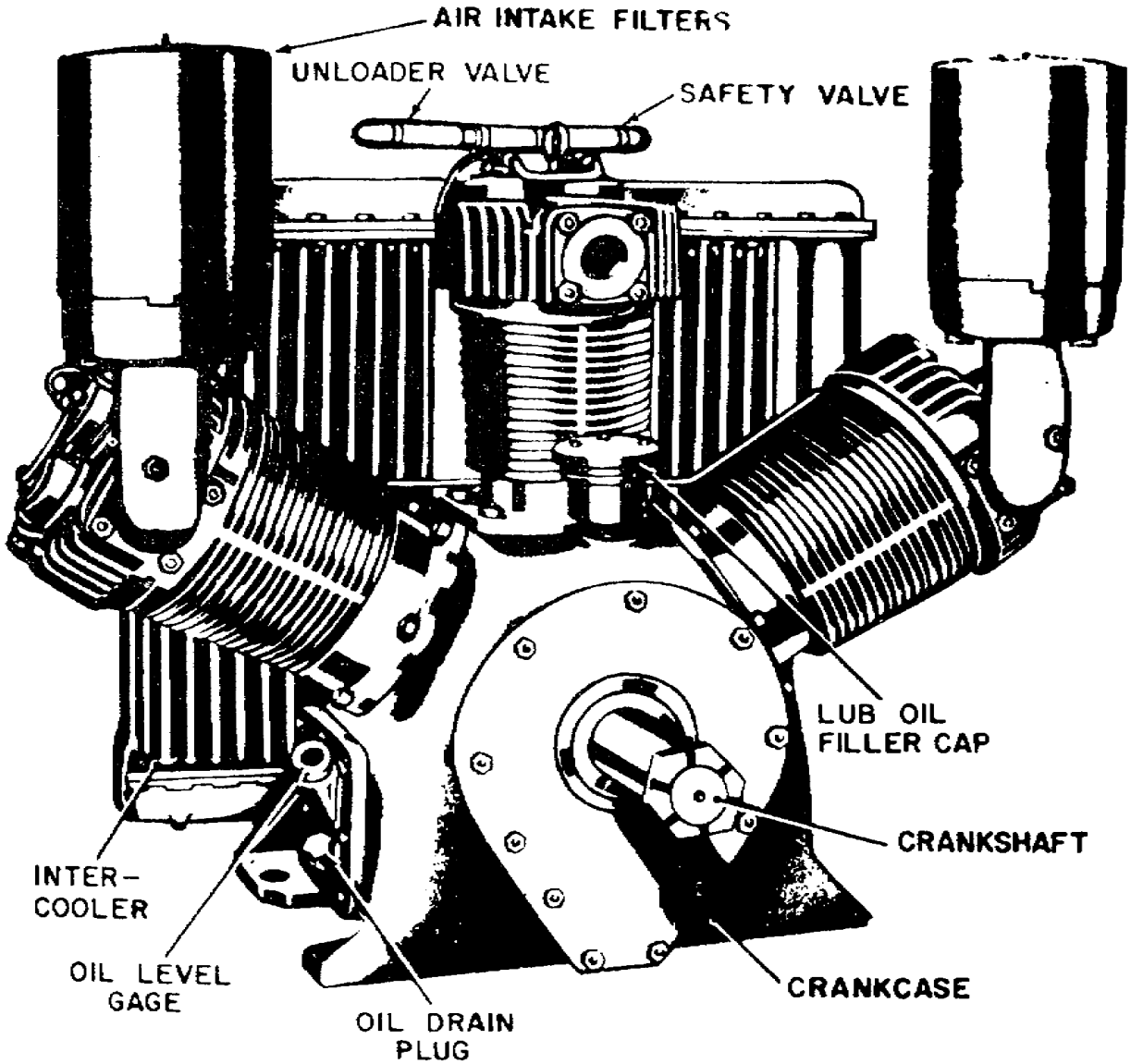

Figure 2.6. Air Compressor.

Repairs to the air compressor consist principally of thorough cleaning, installing new piston rings, and renewing valves. The bearings of the air compressor crankshaft should be inspected and replaced if necessary; unless bearing trouble is experienced, the crankshaft will require little attention for long periods.

Occasionally disassemble and overhaul the air compressor. Remove the compressor coupling from the shaft to prevent damaging the bearings. Before disassembly, clean the compressor and mark the parts so that they can be reassembled in the same positions.

Maintain the oil in the compressor crankcase at proper levels according to maintenance schedules. Clean out the crankcase when the oil is changed, but do not use any flammable cleaning materials. If the oil pressure is too high or too low, check the oil relief valve and pump and the filters.

Remove and inspect cylinder liners and pistons. Hone all cylinders retained in service. After honing, check the clearance between each piston and cylinder with piston rings removed. Also make certain that the cylinder flange face is perpendicular to the cylinder bore. Replace the crankshaft if it is bent or cracked, or if the bearing seats are worn excessively. Check valves for lift and for wear limit. Examine main bearings for general condition and proper end clearance. Disassemble the compressor governor; clean and oil it approximately once a year. Clean or replace strainer element.

2.15. TEST OF REPAIRED ENGINES

Each repaired diesel engine should be operated and checked before it is released for service. Time, fuel, and labor spent breaking in the engine will result in greater longevity and efficiency of the unit. A check is made of compression pressures in each cylinder; exhaust gas temperature for each cylinder at various engine speeds; lubricating oil pressures and temperatures; cooling water temperatures; supercharger or blower pressures; horsepower output under varying conditions of current and voltage, as indicated by the main generator characteristic curve; individual throttle position speeds and loading; color and quality of exhaust gases; and general sound and action of the engine under load and acceleration.

Action of the engine under conditions simulating the engine under load can be tested by sending the current from the main generator through an electric dynamometer that measures the generator's output. A "liquid rheostat" or "water box" also enables an engine to operate at different speeds, as though it were installed in a locomotive pulling different loads. A water box is seldom used, however, because of the danger of electrocution. Other facilities for testing an engine include a cylinder pressure indicator, either the maximum instantaneous pressure type or the curve drawing type; pyrometer

and thermocouples, voltmeter and ammeter with shunts and pressure gages; and thermometers and temperature indicators--a part of the regular engine equipment.

2.16. SUMMARY

Various maintenance services are ordinarily performed during routine maintenance inspections. Cleaning and lubrication are the major part of maintenance. Small inexpensive parts may be easier to replace than to repair and such replacements are often ordered. Other parts, such as fuses and some filters, are necessarily replaced. Balancing and adjustment of parts are also common.

Remove and inspect cast aluminum bearings every 75,000 miles and forged aluminum ones every 85,000 miles. Remove and check bearings, being careful to avoid scratching them or distorting their shells. Clean and lubricate trucks periodically and turn, renew, or replace wheels and axles. Periodically pack journal boxes and bearings, adjust brakes or replace brake parts, and check the fuel system. Oil the moving parts of the cooling system and replenish it with treated water. Whatever the maintenance job, be sure to comply with manufacturer's instructions and standard shop procedures.

Section II. Electrical Maintenance and Repair

2.17. GENERAL

Maintenance of electrical equipment involves cleaning, lubricating, adjusting, and occasionally replacing parts. Cleaning is done by blowing dust out of the equipment with compressed air. If the air is not sufficient, equipment can be brushed with a dry cloth or one dampened with a solvent. Parts are lubricated according to standard lubrication orders; adjustments and replacements are made when needed.

The accepted procedures for maintaining specific pieces of electrical equipment are given in this section. Generators and motors are discussed first, then main power switches, voltage and load regulators, reversers, battery, bearings, and sequence and insulation testing. Although the coil and the commutator are parts of a generator or a motor, they are discussed separately for clarity.

2.18. LINING UP GENERATOR WITH ENGINE

The proper operation of a generator set requires that the armature shaft and frame be in line with the engine crankshaft, and that the air gaps under each pole be equally spaced. The eccentricity at the coupling should be held to a minimum as this directly affects both balance between the parts and the wear of brush and bearing. The airgap of the generator must be uniform within plus or minus 10 percent from average under each main pole, under each commutating pole, and from front to rear. The recommended place for alining the airgap and coupling is at the engine end of the generator.

a. Alining airgap. Where the generator installation permits, measure the airgap under each pole at the coupling end. This is done with a long feeler gage inserted from the commutator end. Since the generator has a nonuniform airgap under the main poles, measurements must be made under the tip of the pole piece. The radial clearance between the edge of the fan and the generator frame may be used; one point on the fan is used for reference and the fan rotated so that the measurements can be made between this point and the frame at the top, bottom, and each side. If the difference in these measurements 180 degrees apart is less than 0.020 inch, the airgap is satisfactory.

b. Alining coupling. The coupling is alined by an indicator fastened to a support extending from the armature flange through a hole in the fan blade. The indicator is attached to this support so that the indicator plunger rides against the face of the generator fan. The dial of the indicator should be set at zero at the top position and readings should be taken 90 degrees apart. An allowance of plus or minus 0.010 inch at the bottom and plus or minus 0.005 on each side will result in satisfactory alinement if the coupling is concentric with the crankshaft and armature shaft.

c. Final operations. Since any movement of the generator frame affects both the coupling alinement and airgap, readings must be repeated for both after setting. Only full-length shims should be used under each generator mounting pad. Not more than three shims should be used under each mounting pad with one shim not to exceed 0.060 inch in thickness; taper the thickest shim to make the airgap and coupling conform to specified limits. After the generator is coupled to the engine, place the generator frame so that the single bearing at the commutator end is located axially to avoid thrust load in either direction. The generator has a float of approximately 3/16 inch between the outer race of the bearing and the housing, and is coupled to the engine with no clearance between the bearing outer

race and engine side of the housing. When the crankshaft is forced toward the generator, the generator frame must be as far away from the engine as possible without putting an end thrust on the coupling. This arrangement provides the maximum amount of clearance required by expansion of the generator shaft and engine crankshaft as they heat up. The armature shaft is forced toward the coupling end of the generator before coupling to the engine.

2.19. GENERATORS AND MOTORS

Inspection and maintenance procedures are the same for generators and small motors. Both should be protected from dust, dirt, oil fumes, smoke, and changes in temperature. Figures 2.7, 2.8, and 2.9 show cutaway views of the main generator, auxiliary generator, and traction motor.

Standard maintenance includes inspection of the following parts: engine starting contactor, field coils and leads, armature, brushes and brush holders, commutator, insulation, generator or motor bearing assemblies, traction motor axle bearings, and axle and pinion gears. These are discussed in the next nine subparagraphs.

a. Remove dust from the engine starting contactor with a brush and lubricate the bearings with a drop of oil. Never apply oil to the contact tips. While inspecting the contactor, remove the contacts to protect them from dust, oil, and metal particles. During inspection, operate the contactor by hand. Silver contacts may become blackened; this does not affect their operation and they should not be cleaned.

b. Field coils and leads are cleaned and repainted. Cleaning the windings with liquid cleaner destroys their protective coating and causes them to crack. They should be cleaned by a steady stream of air and, if necessary, wiped with a dry cloth. Also clean, dip, and bake insulation. Retape and paint field coil and brush holder connections, if necessary.

c. Pull pinions at 250,000 miles and inspect armature shaft. Clean, dip, and bake armature. A complete rewinding of an armature consists of removing bands, cutting coil leads to commutator, stripping coil from core, cleaning and repairing the core, repairing the commutator, inserting formed coils, connecting coils to commutator, making a bar-to-bar circuit test, applying temporary bands, soldering, dipping, baking, and applying permanent bands. A banding machine holds the armature in much the same manner as a lathe,

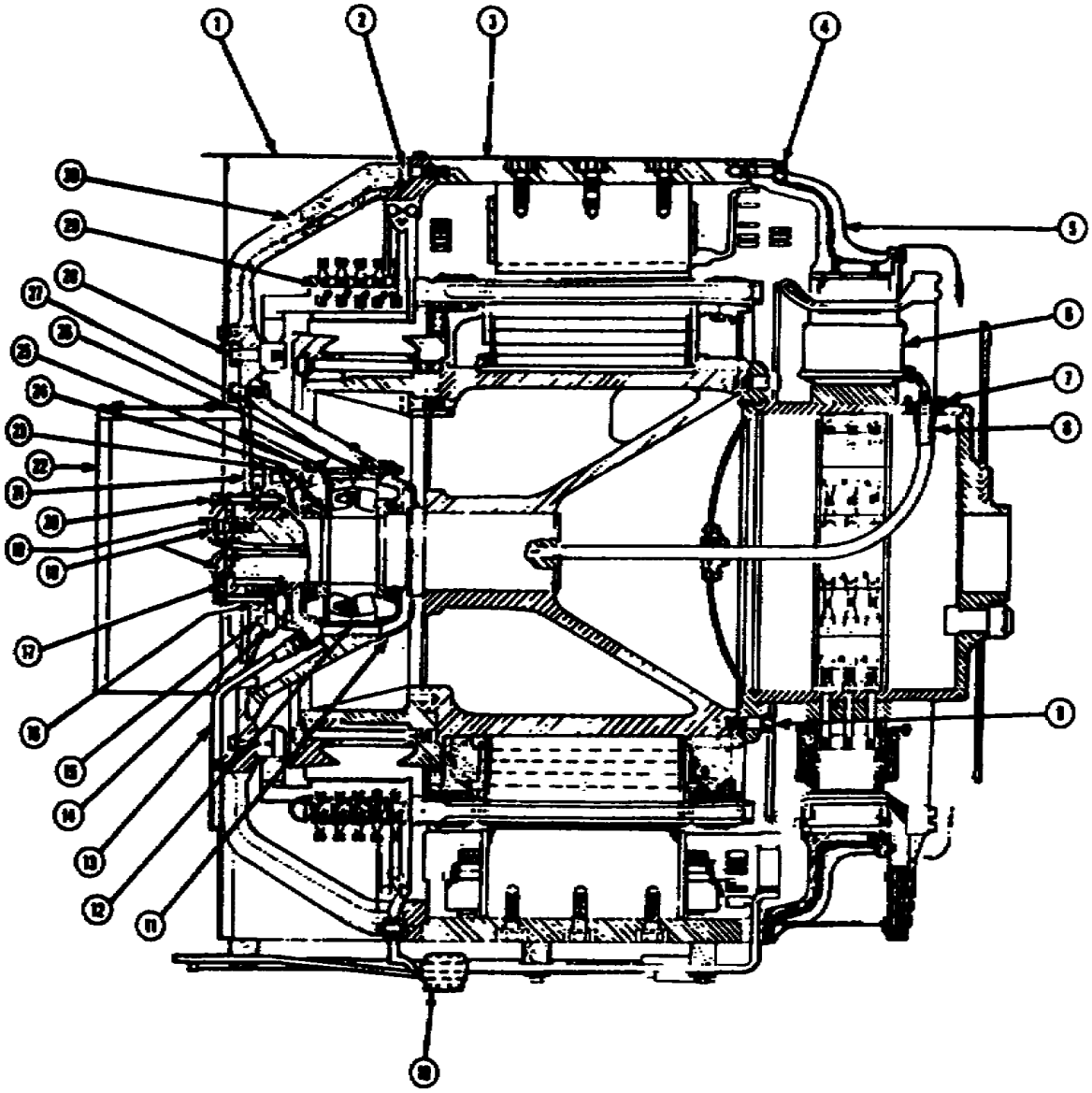

1 Commutator covers
2 Generator frame bolts
3 Main generator frame
4 Bolts
5 AC Stator end frame
6 Rotor poles
7 Steel flange
8 Fibre bushing
9 Rotor nuts
10 Bolted connections
11 Bearing cap
12 Bearing outer race
13 Drain pipe
14 Slip ring brushes
15 Studs
16 Slip ring
17 Plate
18 Bolts
19 Lead
20 Terminal post
21 Ac brush holders
22 Guard assembly
23 Sleeve
24 Outer oil thrower
25 Bearing cover
26 Spline nut
27 Bearing housing
28 Brush holder mounting bolt
29 Commutator brushes
30 End housing

Figure 2.7. Main Generator.

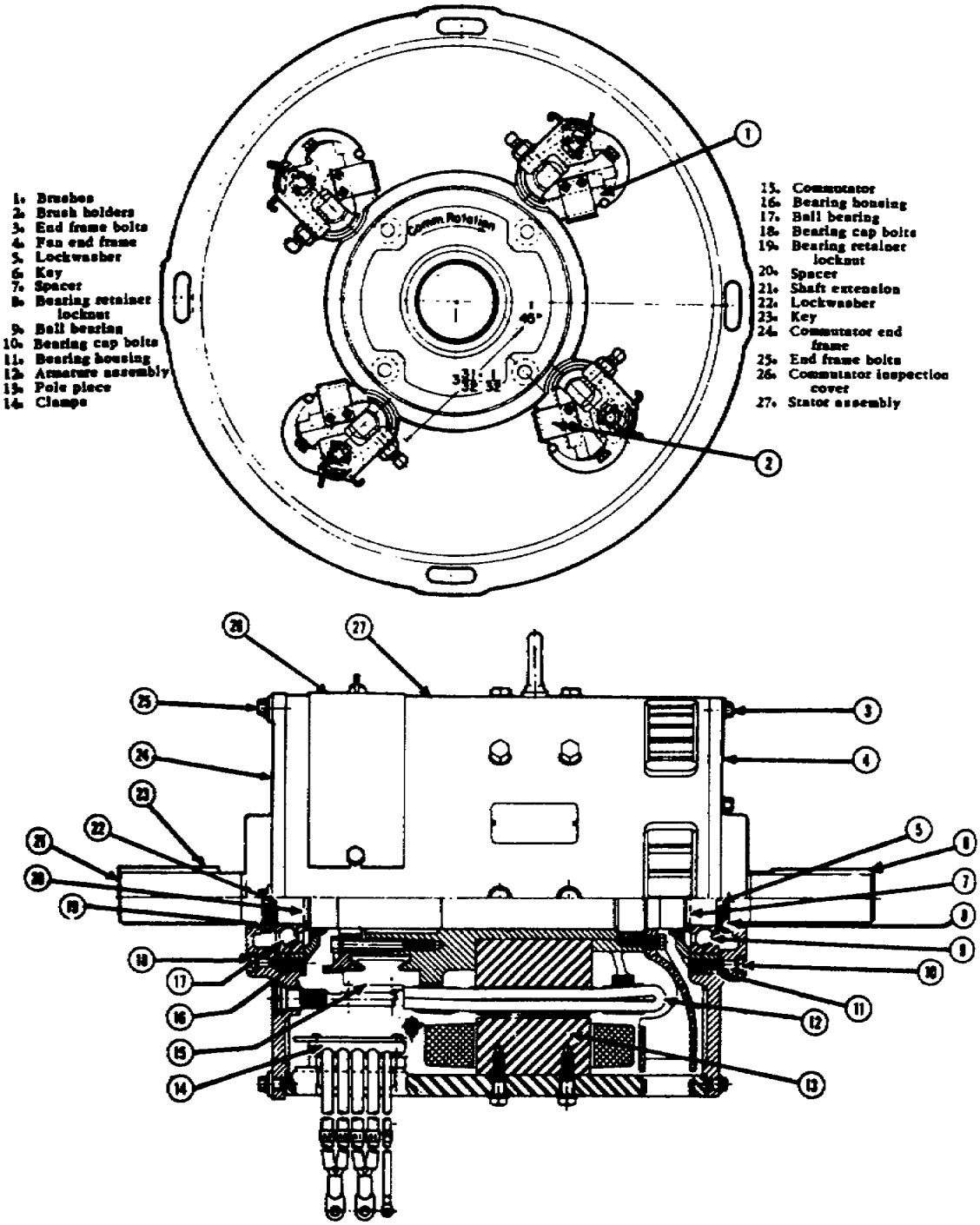

Figure 2.8. Auxiliary Generator.

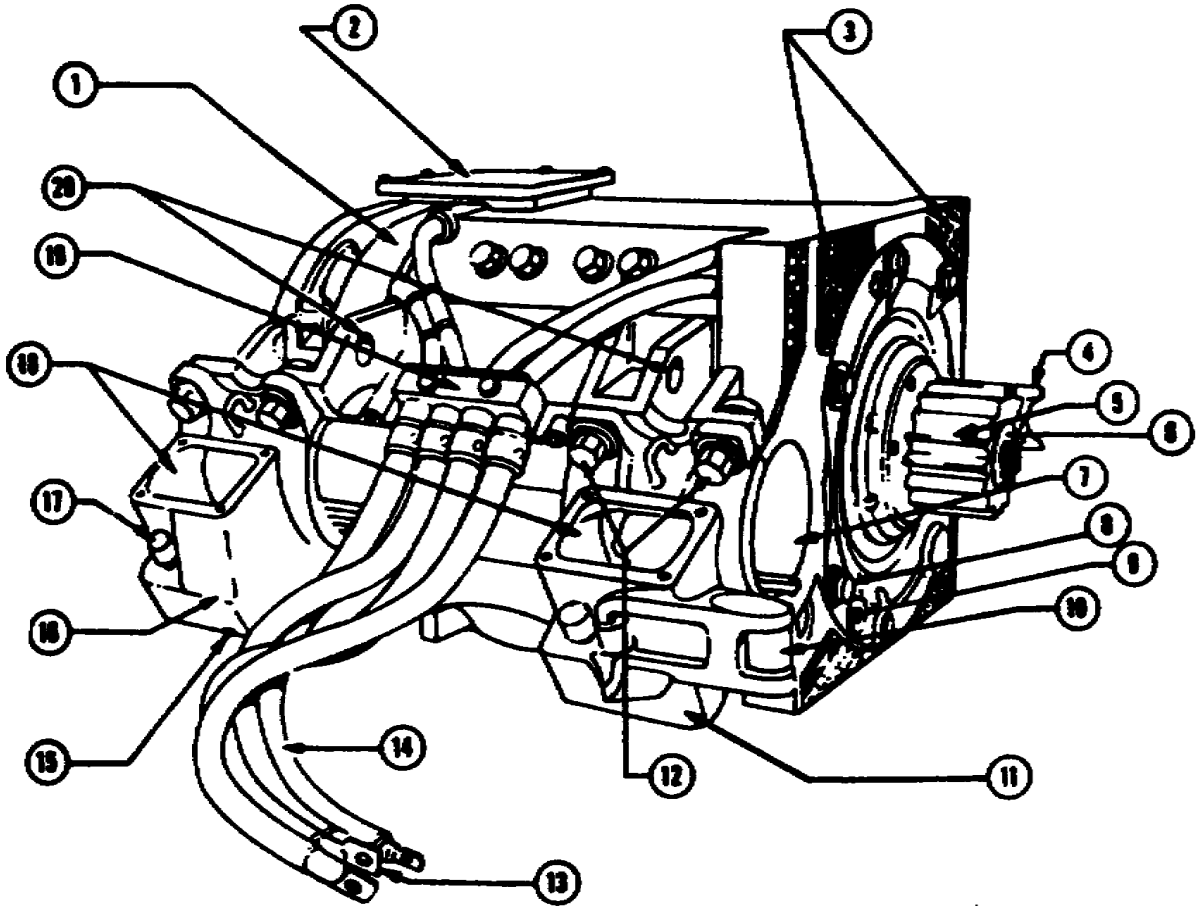

1 Commutator inspection cover
2 Air intake seal plate
3 Cooling air discharge vents
4 Gear case support
5 Pinion
6 Pinion nut
7 Axle side motor frame
8 Pinion end housing capscrews
9 Jack-out bolt holes
10 Gear case support
11 Pinion end suspension bearing cap
12 Suspension bearing cap bolts
13 Traction motor connectors
14 Traction motor leads
15 Drain plug
16 Commutator end suspension bearing cap
17 Oil filler pipe
18 Felt wick lubricators
19 Cable cleat
20 Lifting eyes

Figure 2.9. Traction Motor.

and turns it slowly while drawing the wire. An open or grounded circuit in an individual coil can be repaired without rewinding.

d. Brushes and brush holders are inspected periodically. Brushes should move freely in the holders and the holders and insulator must be clean. Lift the springs and clean the brushes by raising and lowering them in the holders. Brushes that have been chipped or show excessive wear are replaced with the same grade of brush. When new brushes are installed, they are sanded-in by placing a piece of No. 00 sandpaper under the brush and moving the paper in the direction of rotation, illustrated in figure 2.10.

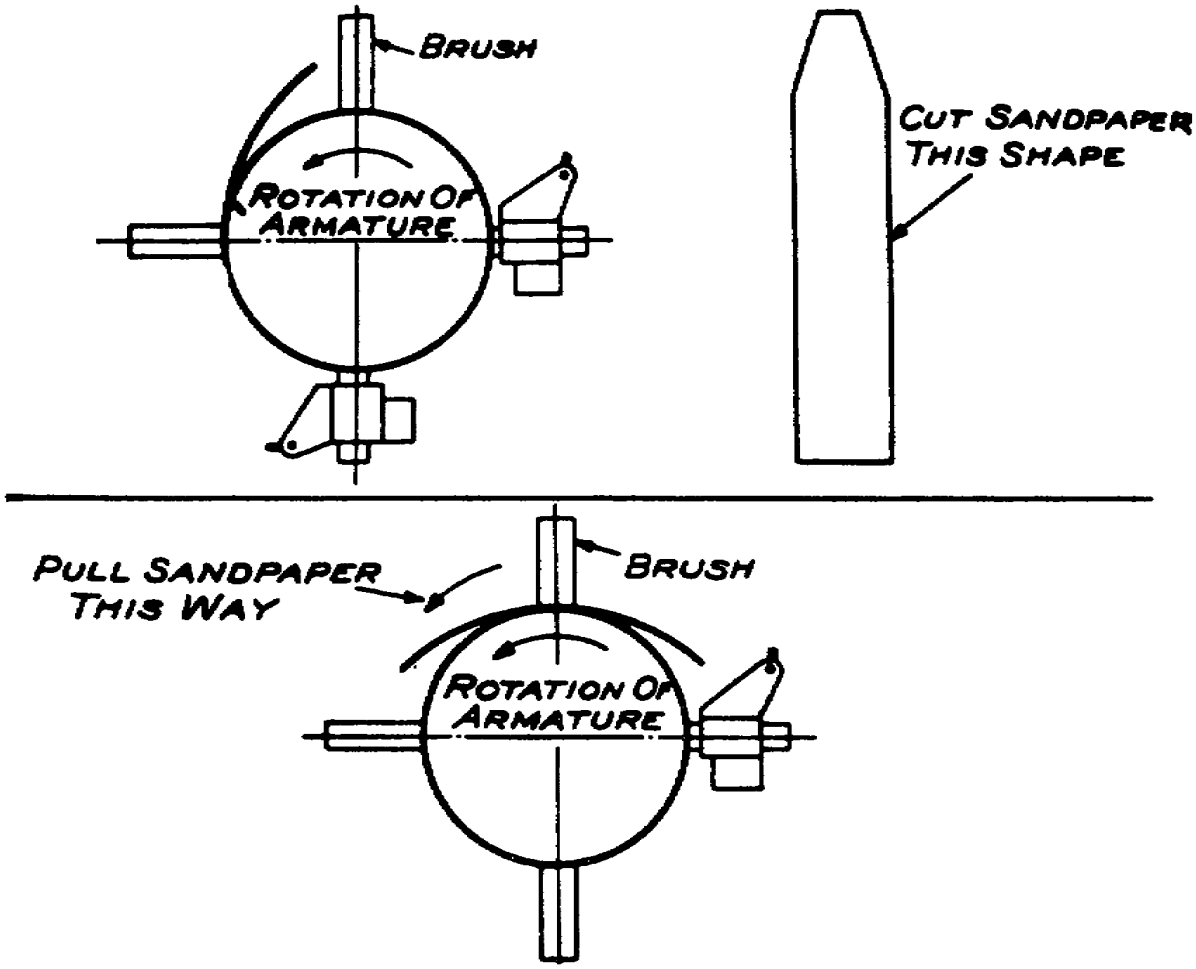

Figure 2.10. Sanding-in Brushes.

e. If the commutator becomes pitted, clean it with a fine commutator stone. The process is shown in figure 2.11. Be careful to keep copper dust from the windings; after stoning, blow out the windings with low-pressure compressed air. If the commutator has high and low spots or signs of burning, place the armature in a lathe and turn the commutator enough to produce a uniform surface. After the commutator has been turned, undercut the mica. Do not lubricate the commutator, but insulate the commutator cap with insulating varnish.

f. Insulation may be dipped and baked if necessary, but it may need only a light spray coating of insulating varnish. Avoid needless dipping and baking because extra material on the windings decreases heat transfer and ventilation. Since insulation deteriorates in service, it is tested first to determine if repairs are needed, then again after repairs are finished.

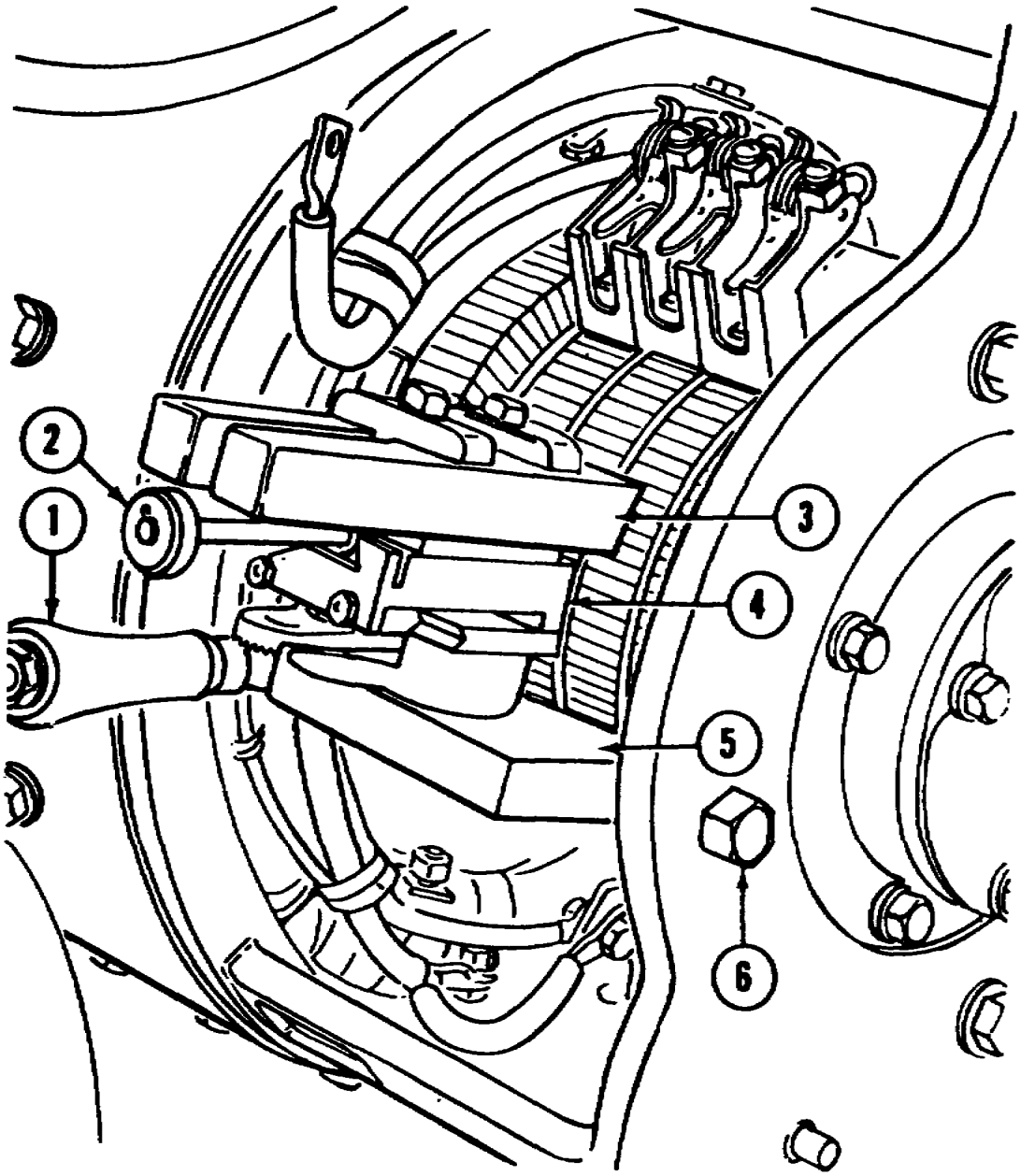

1 Commutator grinder
2 Seating adjustment
3 Resurfacing stone
4 Carriage
5 Mounting bracket
6 Mounting capscrew 5/8 inch by 11 inch

Figure 2.11. Commutator Grinder Installed.

g. Inspect, clean, and repack generator or motor bearing assemblies. To prevent bearing failures, observe the following precautions.

(1) When removing coupling flange or blower fan wheel assembly, use a puller that does not apply a load on the bearings.

(2) Press coupling flange or blower fan on the shaft in such a way that the forces are not transmitted through the bearings.

(3) Prevent bumping of auxiliary generator shaft; this can damage the bearings.

(4) Do not reuse bearings which have been removed from the shaft at any time; instead replace them with new factory-packed bearings.

h. Tolerances on traction motor axle bearings vary slightly depending on the manufacturer of the locomotive and whether it is to be used in road or switcher service. The manufacturer's maintenance instructions or appropriate technical manuals should be followed when bearings are to be repaired or renewed. Whenever a traction motor is removed from a locomotive, the bearing alinement should be checked before the motor is reinstalled in the locomotive. If a bearing shows a sign of cutting, scrape it down to a new surface; if too badly worn, replace with a new one. Before installing bearings, examine the journal for roughness or cutting.

If bearings are hot, check oil level in the oil cavity, examine waste packing to make sure it has not fallen away from journal, and check bearing clearance.

i. Traction motor axle and pinion gears are removed with a gear puller. Never heat the gear before pulling and never use wedges between the gear and the bearing cap. To prevent damage to antifriction bearings, remove the armature from the motor frame, place it in suitable V-shaped supports, and then pull off pinion gear. Never strike the pinion gear or gear puller with a sledge or any heavy object while the armature is in place in the motor frame.

The end of the armature shaft on which the pinion gear is mounted and the bore of the pinion gear are tapered. When reinstalling the traction motor pinion gear, first clean the tapered portion of the armature shaft and the bore of the pinion thoroughly and remove any surface scoring. Coat the tapered surface of the armature shaft with a very light coating of bluing spotting compound.

Place the pinion on the shaft as far up as it will go on the taper by hand and rotate it slightly back and forth. Remove the pinion and examine both surfaces. At least an 85-percent fit has to be shown by the bluing contact of the pinion bore on the armature shaft. Any high spots shown by the bluing that will prevent at least an 85-percent fit will be removed.

Record the position of gear on shaft with respect to end of shaft. Make measurements using a micrometer depth gage set in a frame, as shown in figure 2.12. The points of measurement are marked on the end of the shaft and the pinion to insure that they are mounted in exactly the same manner after heating.

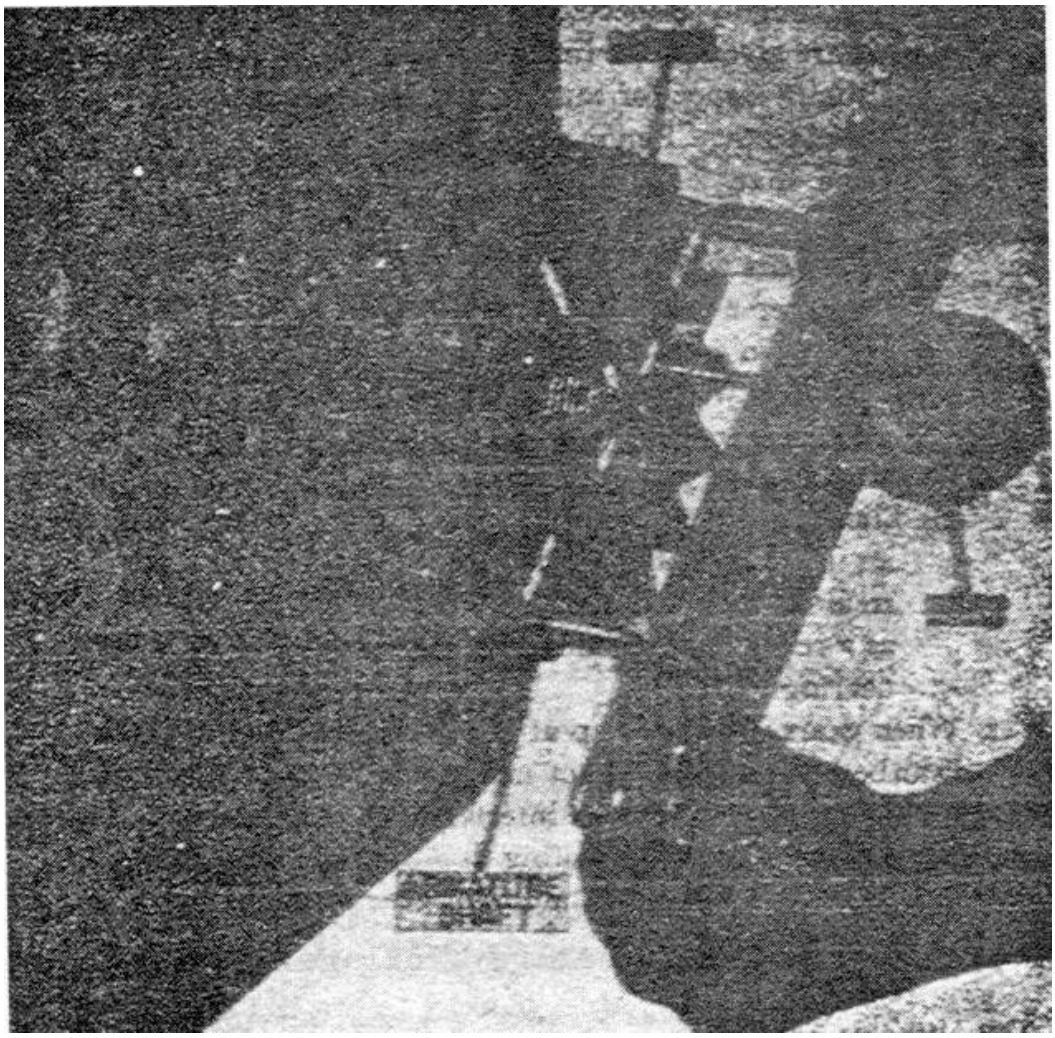

Figure 2.12. Method of Using Pinion Gear Advance Gage.

Heat the pinion gear in an oven or in oil until it has reached a uniform temperature and is the required number of degrees above the shaft temperature. Check shaft and pinion gear temperature with a hand pyrometer. Never permit the temperature of the pinion gear to exceed 375° F. Be sure maximum advance is obtained, using a dummy pinion nut which has loose threads to

permit quick tightening. Use a suitable spanner wrench for prompt tightening of nut before the pinion gear cools. After it has cooled, remove dummy pinion nut and check pinion gear carefully by measurement for proper advance. If the mounting is satisfactory, apply and tighten the regular lockwasher and nut.

When a wheel set is removed from a truck for any reason, the gears should be thoroughly inspected. The condemning limits for axle and pinion gears are given in the inspecting procedure as follows.

(1) Inspect visually or magnetically for broken, chipped, or pitted teeth. Pinion and axle gears should be condemned when more than 20 percent of total working surface of teeth are chipped or pitted. Axle gears should be discarded when either one of the working surfaces is worn to a point where a step 1/32-inch deep exists in the root of the gear tooth where contact with the pinion ends.

(2) Check for wear limits determined by dimension across tip of tooth. The minimum allowable dimension at this point is 3/32 inch for axle gears and 1/32 inch for pinions.

(3) Light scuffing is characterized by vertical, root-to-tip lines and is an indication of faulty lubrication which, if not corrected, may result in ultimate destruction of the teeth. The heat generated as a result of this condition may cause damage to the armature bearings.

When gears with a hump at the pitch line or steps at root of tooth are disturbed by application of new axle linings or mated with other gearing, they will operate with interference stresses and torsional vibration until battered in a new mating fit. Operation under this abnormal condition may lead to fatigue failure of gear teeth and shorten the life of armature windings.

2.20. CABLES AND WIRING

Cables and wiring must be inspected whenever an opportunity presents itself. This includes insulated bus bars as well as wires and it applies, of course, only to exposed sections. Condition of the wires is determined by megger and high potential tests. Cleaning should be done by wiping with rags or using a suitable solvent; if a solvent is used, all traces must be removed. When the cleaning is completed, paint accessible sections, particularly those exposed to dirt, with an insulating paint. If any section of wiring is found to have deteriorated excessively because of heat, consider relocating

the wire to reduce such exposure since heat is a principal enemy of insulation.

2.21. COILS

The most common method of testing for short circuits in field coils is the growler test, and many repair shops are equipped with a transformer or growler for this purpose. A sketch of a growler is given in figure 2.13. The growler test is a very simple and effective method, since no accurate electrical measurements are required. Apply pressure to the field coil when it is being tested, to approximate actual conditions when it is clamped in the frame. If pressure is not applied, the coil may show no defect on the test but may give trouble from short-circuited turns when clamped between the pole tips and the inside surface of the frame. With the test in operation, after adjusting the knife switches for the desired number of turns on the transformer, position the removable portion of the core without the field coil. Note the deflection of the ammeter, which indicates the value of primary current. Open the line switch and place the coil in position around the transformer core; close the switch to reapply voltage to the transformer. If the ammeter shows the same deflection as before, the coil is free of short-circuited turns; if there is a short circuit, a much heavier current will flow in the primary coil of the transformer, indicated by a greater deflection of the ammeter.

2.22. DIPPING AND BAKING

Coils which have been in operation 4 or 5 years should be dipped and baked as a preventive maintenance measure. Some coils, such as field coils, are dipped before mounting on their core. With armatures, the entire assembly is suspended with the axis vertical and the commutator on the upper end, and lowered into the compound up to, but not including, the commutator. The varnish is hot, and the coils or armature are cleaned and preheated in an oven before dipping. Dip for 5 to 10 minutes, drain for 5 minutes, and then place in oven for about 6 hours at about 300°F. When an armature is rewound, it is baked before banding and again after banding.

2.23. COMMUTATOR

Whenever the locomotive comes in for maintenance, the commutator should be touched up with a canvas-covered block to remove excessive formation of oil scum. On switching locomotives, this work is done at the time of monthly inspection. If excessive

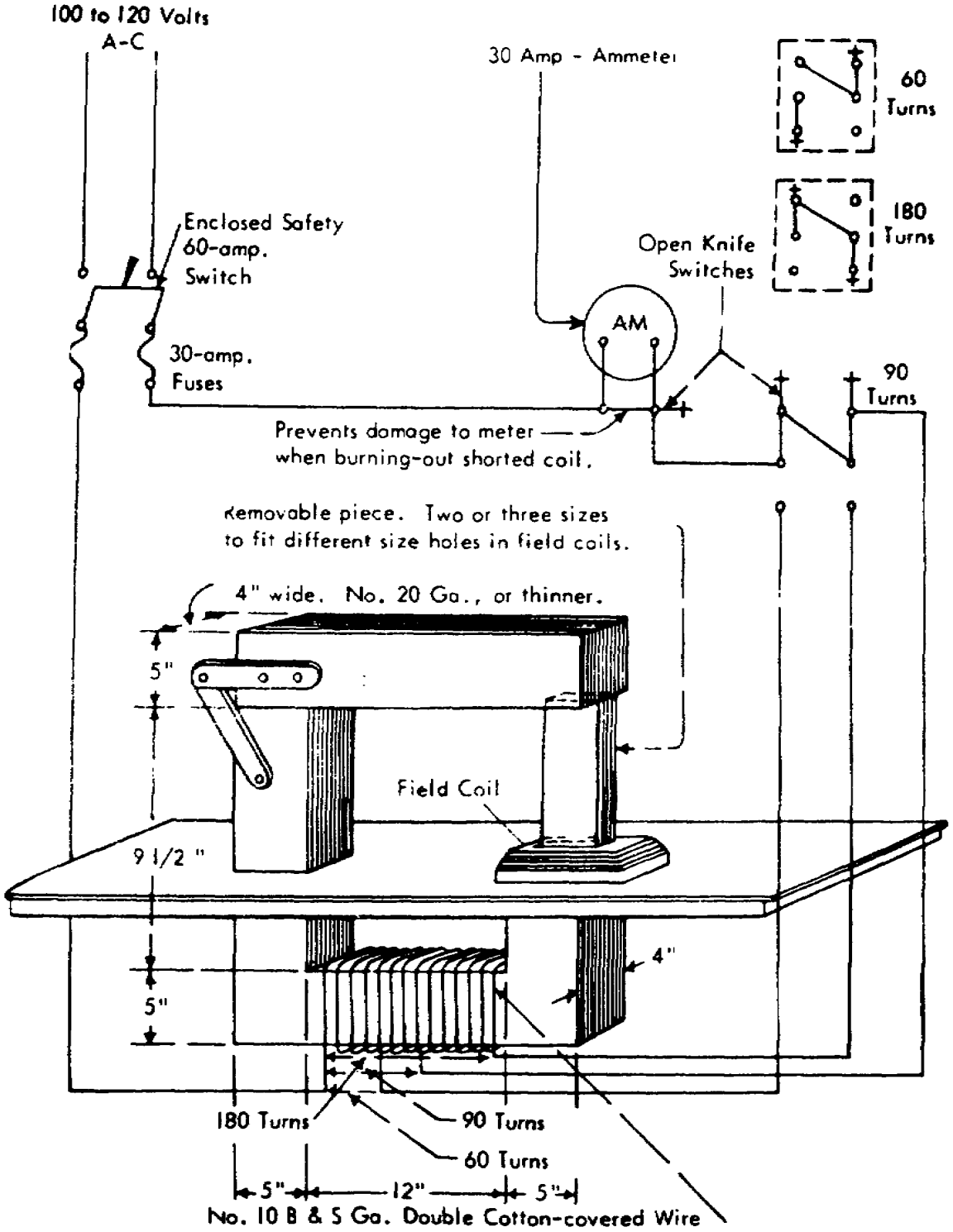

Figure 2.13. Growler Test.

formations of scum cannot be removed with canvas, the use of a fine commutating stone lightly applied may be required; this will permit the operator to touch up the commutator lightly and maintain true surface.

A commutator having a smooth glaze of chestnut color is in satisfactory condition; a slight burning often occurs at the edges of every few bars due to the method of winding to get high electrical efficiency. No maintenance is required for this type of defect. However, if such spots are deep enough to cause a brush to leave the commutator if the commutator is dirty or smudgy and presents a raised surface, it may be necessary to smooth its surface and bring it back to concentricity by grinding. When the commutator is concentric, its radii are all the same length. Eccentricity may be discovered by clamping a dial gage on the frame of the generator or motor and rotating the armature by hand, one commutator bar distance at a time. The dial gage measures, in thousandths of an inch, variations in commutator radius. An eccentricity or difference of 0.001 inch, within a distance less than the brush spacing around the commutator, may indicate the necessity of stoning. For bad burns and extreme eccentricity, it may be necessary to turn the commutator on a lathe.

Blackening of the commutator may be caused by oil from the bearings or by surges of current from stuck brushes. Leads from the armature windings are soldered into the ends of the commutator bars. If the armature has been overheated by overloading and solder has been thrown out, the motor should be replaced. Flat spots on the commutator can be caused by an unbalanced armature, commutator out of round, commutator bars too high or too low, locomotive driving wheels worn on one side, or flat spots on the wheel. Burned spots on the commutator may result when locomotive power and brakes are applied simultaneously. Burned edges of a commutator segment indicate a winding or cross connection open in the armature.

2.24. MAIN POWER SWITCHES

Main power switches must be inspected as follows to determine the need for any maintenance or repair. Insure clearance of all moving parts and correct excessive play. Check contacts for proper alinement, pressure, and wiping action wear, adjust when necessary. If contact tips are burned or pitted, clean or replace them. Tighten electrical connections and contactor mounting, if necessary. Item 3 in figure 2.14 shows the contactor mounting bolt. Check interlock fingers and bars for worn, burned, or pitted areas. Keep magnet in good working order.

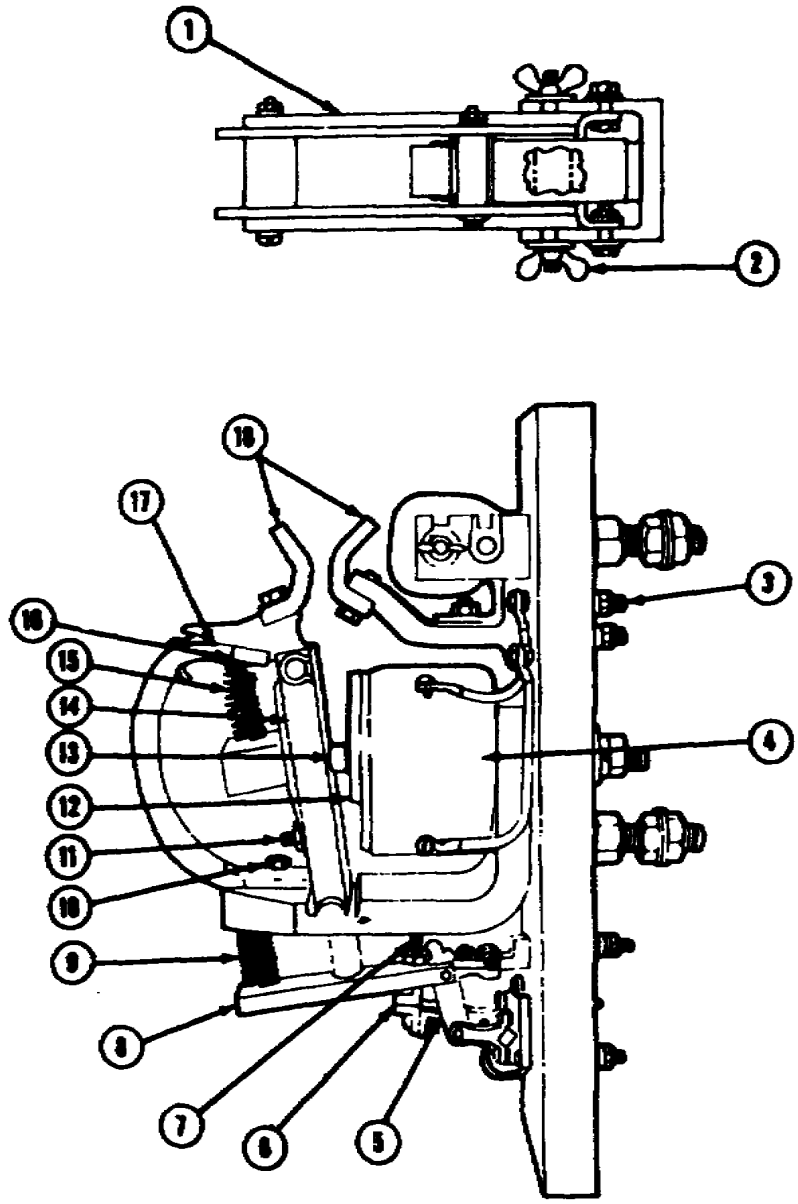

1 Arc chute
2 Wing nuts
3 Mounting bolt
4 Coil
5 Connecting link
6 Interlock contact tips
7 Interlock adjusting screw
8 Lever shaft
9 Armature spring
10 Screw
11 Tapered screw
12 Pole shoe
13 Capscrew
14 Armature
15 Contact pressure spring
16 Screw
17 Fexible shunt
18 Main contacts

Figure 2.14. Engine Starting Contactor.

2.25. VOLTAGE REGULATORS

Two types of voltage regulators are found on locomotives: the torque-motor operated and the relay types. The torque-motor one, sketched in figure 2.15, is treated as follows: if discoloration or sparking develops on the regulator commutator, clean the regulator as soon as possible. Inspect sector and carbon rim assemblies and replace them if they are burned or worn. Check piston

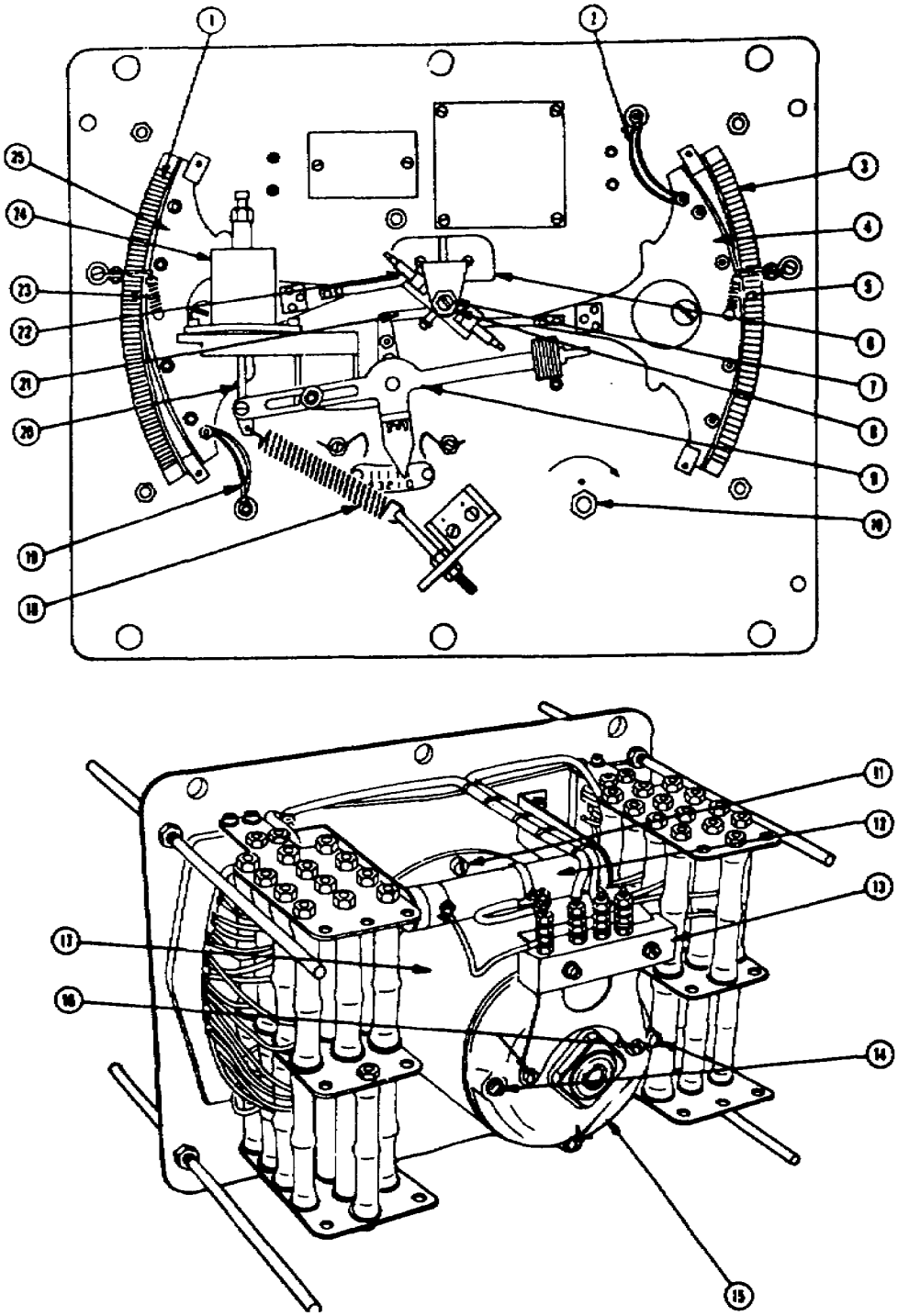

1. Commutator assembly
2. Electrical leads
3. Commutator assembly
4. Sector
5. Sector spring
6. Main shaft support bracket
7. Bearing screw
8. Bearing locknut
9. Actuating shaft assembly
10. Rheostat
11. Motor mounting bolts
12. Resistor
13. Terminal board
14. End frame bolts
15. Motor end frame
16. Screws
17. Motor Assembly
18. Main spring
19. Electrical leads
20. Piston extension shaft
21. Link
22. Main shaft assembly
23. Sector spring
24. Dash pot assembly
25. Sector

Figure 2.15. Torque-motor Voltage Regulator.

movement in the dashpot; if it sticks, the dashpot must be overhauled. Lubricate sector bearings. Make sure that the voltage regulator is set to manufacturer's specifications. Poor regulation can result from dirt in the dashpot, commutators and sectors, main shaft bearings, or actuating shaft bearings.

A relay voltage regulator is serviced by checking the following: contacts for wear; current coil connections for tightness; electrical connections for tightness and good contact; and coils and resistors for burns and discoloration. Adjustments should not be made unless detailed instructions for the type of relay are available.

2.26. LOAD REGULATOR

A commutator load regulator, shown in figure 2.16, has few moving parts. Consequently, it is easy to keep in service and seldom needs attention except for cleaning. Piping connections must be kept tight to prevent oil leaks and entry of air into the system. If pipes leak, replace the oil seals in the operating cylinder or motor shaft. Load regulator timing is controlled by the flow of oil through the pilot valve, item 1 in figure 2.16, to or from the regulator.

2.27. REVERSER

Remove the reverser to dismantle, clean, lubricate, and repair it. Renew piston packing; examine pinions and racks for wear; clean and test magnet valves; renew or build up and remachine contact segments; check and adjust contact tension and interlocks; inspect stationary contacts, shunts, and springs and replace if necessary. Some of these parts of the reverser are pictured in figure 2.17.

At intervals, the valve unit should be disassembled to permit cleaning, checking, and replacing worn valve parts. To disassemble, first remove the cover. The pole plate may be lifted off and the valve stem pulled. Taking off the large nut at the bottom allows the removal of the needle valve and spring.

A valve may stick or leak because of a deposit of dirt and good operation may be restored by washing with a cleaner. If the valve still leaks, the seats are probably scored and it will be necessary to grind them with a fine grinding compound.

a. Testing valves for leaks. To test the lower valve seat for leaks, cover the air ports in the side of the magnet valve housing

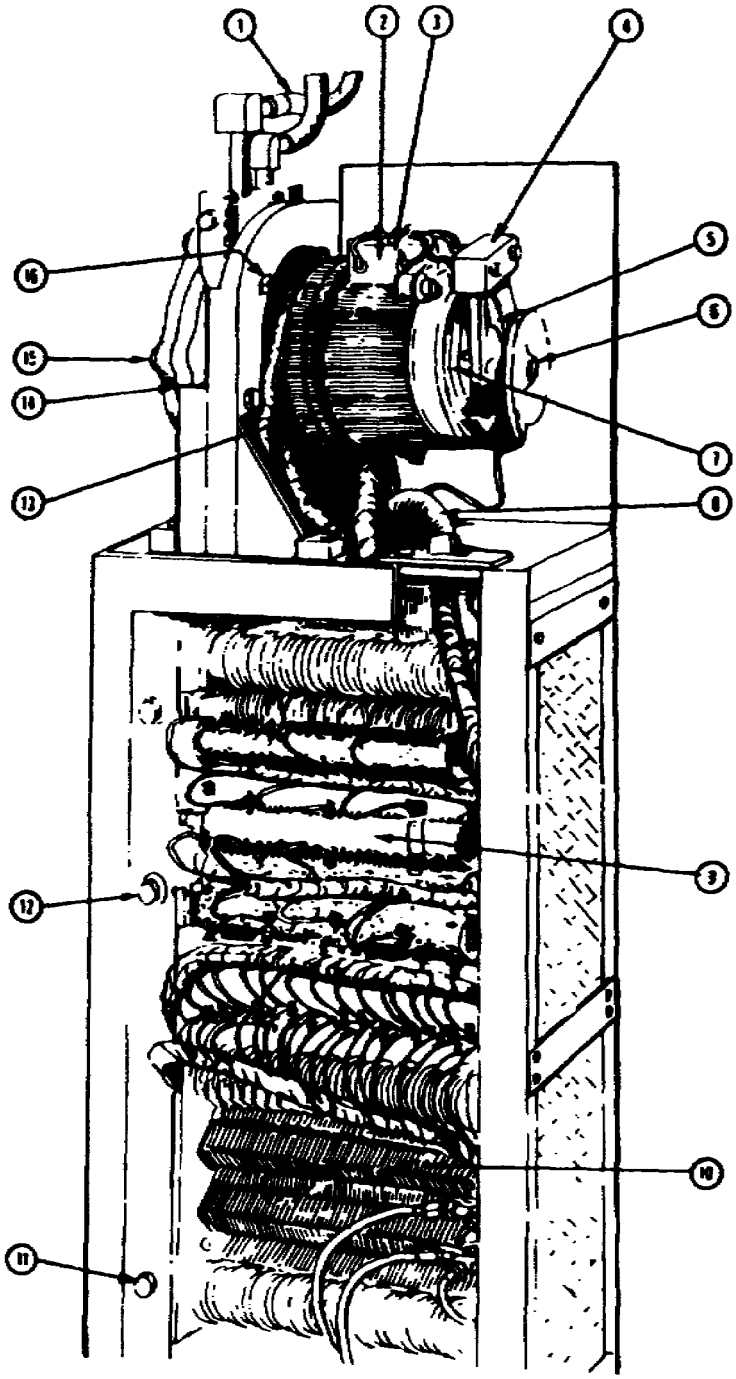

1 Pilot valve oil lines
2 Commutator brush
3 Commutator brush shunt screw
4 Slip ring brush
5 Brush holder arm
6 Brush holder arm nut
7 Oil seal holding ring
8 Commutator wiring harness
9 Tube resistors
10 Grid resistors
11 Grid resistor fastening bolts
12 Tube resistor fastening bolts
13 Commutator
14 Vane motor
15 Vane motor cover bolt
16 Vane motor mounting bolt

Figure 2.16. Load Regulator.

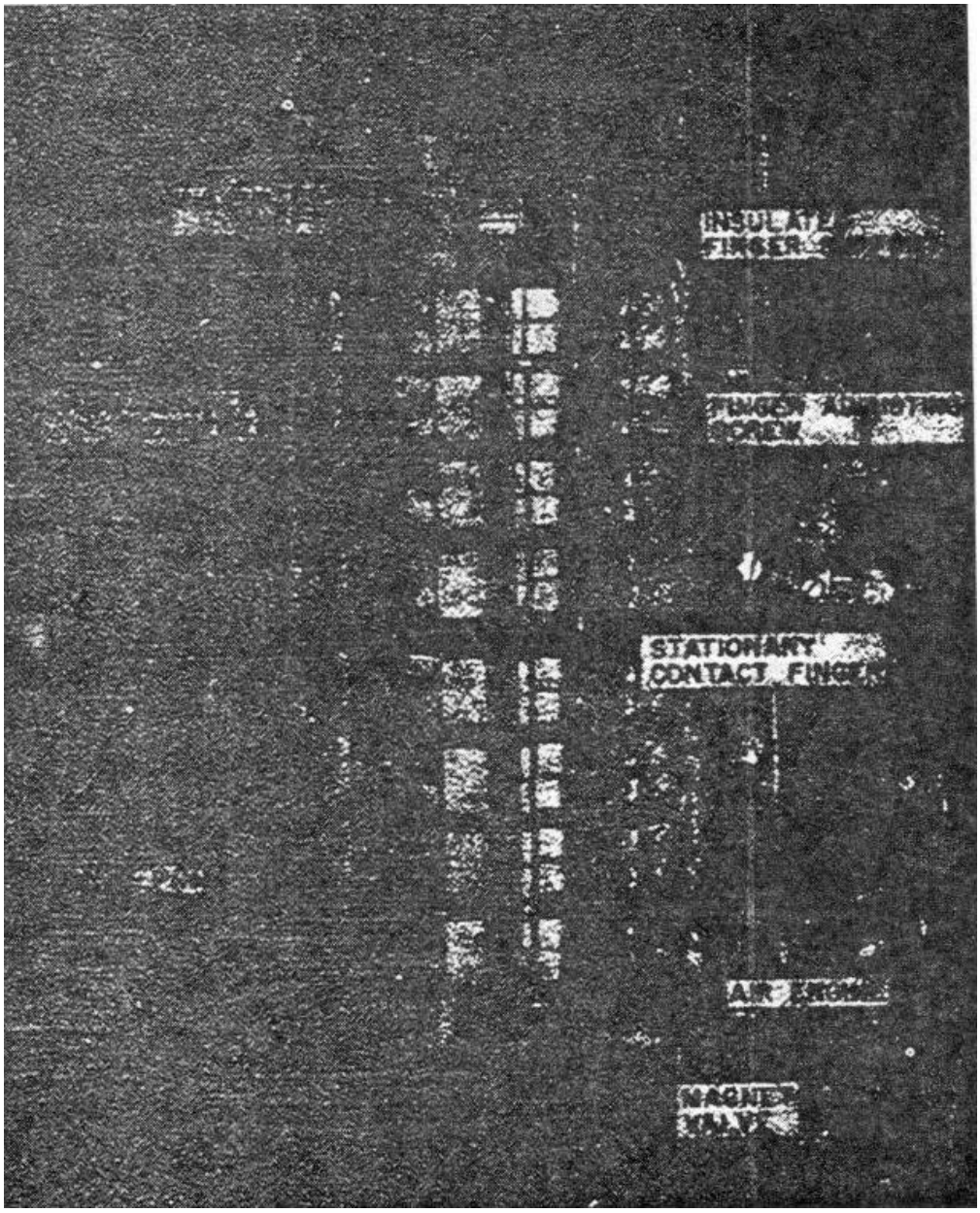

Figure 2.17. Reverser.

with soapy water. If bubbles form, the lower seat must be reground. To test the upper valve seat, press down the button on the cover of the magnet valve housing. This has the same effect as though the magnet coil were energized. While holding the button down, again cover the air ports with soapy water. If bubbles appear, the upper seat must be reground. If bubbles do not appear while making the above test, both seats fit properly.

b. Grinding valve seats. If the upper seat must be ground, coat the end of the valve stem with grinding compound. Replace the stem in the valve housing, insert screwdriver in the slot of the adjusting screw on the valve stem, and move it back and forth. To grind the lower seat, insert the needle valve after coating it with

valve grinding compound. Leave the valve stem in the housing to act as a guide for the valve, then insert a screwdriver in the slot and move it back and forth. After both the upper and the lower seats have been ground, the valve housing, the stem, and the valve should be thoroughly cleaned, reassembled, and connected to 90 psi air pressure. If, after considerable grinding, either seat still leaks, the valve seat is so damaged that a new needle valve, a stem, and a seat assembly are necessary. Check both the needle valve and the valve stem for damage.

c. Valve stem seats improperly. If a valve blows through the exhaust port when the coil is energized, the valve stein is not seating properly. This may be caused by any one of the following, listed in the order of the probability of occurrence:

(1) Dirt on valve seat.

(2) A weak battery or low voltage applied to the coil. This will sometimes give a sufficient pull to unseat the lower valve but not enough to close the exhaust.

(3) Dirt under the pole plate.

(4) Valve stem worn down so that pole plate strikes the core before the valve seats. This rarely occurs until after the equipment has been in service for several years. If the stem is found to be too short, it can be slightly stretched by peening the shank. However, it is recommended that a new assembly be installed.

2.28. BATTERY

Proper maintenance will prolong the life of the battery. Since batteries are ruggedly built, the basic problem is mainly one of paying careful attention to a few important rules. These are given in the subparagraphs that follow.

a. Keep the battery compartment ventilated to dissipate heat. Screen openings to keep out dirt. Leave drains in the bottom of the battery compartment so that washing solution or drain water won't mar the paint or superstructure.

b. Block the battery to prevent movement. Cables should not be subject to crushing or rubbing, which will destroy insulation.

c. Adjust voltage regulator to keep the battery properly charged. Too-high settings increase water consumption and heat. Too-low settings result in low specific gravity readings and little water consumption.

d. In cold weather, add any necessary battery water just before the locomotive goes into service. Water, if it stands without mixing with the electrolyte, will freeze and damage the battery.

e. Keep the battery clean and dry. If soda is used on the cover, be sure that none of it gets into the cells. Keep all connections clean and tight.

f. Normal hydrometer readings vary from 1,280 when charged to 1,160 when discharged.

g. The following safety rules are important: open the main battery switch when working on the battery, keep flames and oil away from it, and do not lay tools on top if it.

2.29. BEARINGS

The term "antifriction bearings" is applied to all ball or roller bearings to distinguish the roller from the sleeve bearing. If properly applied and lubricated, ball or roller bearings need much less attention then sleeve bearings. They are in general use for main generators, armatures of traction motors, belt-driven auxiliary generators and exciters, blower motors, and nearly all electrical rotating apparatus. Each time a motor is overhauled, clean, inspect, and repack the roller bearings.

Clean bearing parts with kerosene or other petroleum cleaner. Do not allow them to lie around with old grease in them. Do not use compressed air on a bearing; it may contain moisture which would cause corrosion of races or rollers. Do not take cages apart.

Inspect bearing parts for flaking or cracks, pitting, signs of wear, and any excessive amount of dirt. Examine side surface and bore of inner race for evidence of rubbing or turning on the shaft and outer race and commutator-end bearings (traction motor) for smearing on flange and thrust collar.

To prevent corrosion, dip bearing in SAE 10 mineral oil heated to 203° F., immediately after cleaning. Drain bearing and wrap it in waxed paper to keep it clean. Clean bearing housings and adjacent parts with kerosene or other petroleum cleaner. After

cleaning, wipe housing dry. Dip flingers and adjacent parts in SAE 10 mineral oil, heated to 203°F., and drain. Store parts in a dry, clean place.

On any shaft having two bearings, one is suitable for taking end thrust and is clamped rigidly to take this thrust; the other must be free to allow end movement which results from expansion or contraction of the shaft when temperature changes.

2.30. SEQUENCE TESTING

Electrical testing instructions are issued by the manufacturer for each group of locomotives. These tests must be followed accurately, with no attempt to adopt substitutions. The following discussion of typical testing procedures merely tells what is usually done and why it is done. The operating sequence of shutdown control circuits can be tested at battery voltage by manually moving interlocks and controls. Disconnect the generator first, however, so that it will not crank the engine or produce power voltage. When testing, keep the following things in mind:

Starting circuit interlocks must prevent the armature contactors from closing until the field contactors have closed.

The fuel pump must operate so that proper pressure shows on the fuel gage. The shutdown valve in fuel line must function with any safety devices, such as low oil pressure switch or high water temperature switch, according to the wiring in each individual case.

Interlocks between the throttle and reverser and those in fan motor circuits and shutter control circuits must function properly.

Any auxiliary equipment, such as sanders, must operate.

Traction motor field shunting and transition must occur at the proper time and sequence.

Wheel slip relays, ground relays, etc., must give proper protection and turn on the alarm and indicator lights.

Any replaced traction motor must be checked for proper direction of rotation and direction of field connections.

2.31. INSULATION TESTING

To detect any weakness which may cause a breakdown in service, insulation should be tested periodically at voltages in excess of the normal operating voltage. Any defects must be remedied before failure occurs en route. Insulation tests are either the resistance test or the dielectric test.

a. Resistance test. Resistance tests point up the presence of moisture, grease, carbon, and dirt that would cause grounds, false indications, or miscellaneous failures not due to a breakdown of the insulation. They are adequate for the low voltage control circuits which operate at about 75 volts. Control circuits should be kept free from grounds. Although high insulation resistance does not necessarily indicate high dielectric (nonconducting) strength, low insulation resistance does indicate low dielectric strength. Control circuits of new locomotives should have a resistance of 1 megohm, and locomotives in service should not fall to less than one-half of this value. An important feature of these tests is the comparison of readings taken under similar conditions at various timed. If wide variations appear in successive readings made under approximately the same conditions of temperature and dryness, the cause should be determined.

The recommended minimum megger reading for the power circuit of either a main generator armature plus commutation field or a traction motor is 1 megohm at 77° F. If the windings or parts of the windings are oil or water soaked, the damaged parts should be removed regardless of the megger reading. Insulation resistance of the windings varies greatly with humidity and temperature. As an approximation, the insulation resistance for dc motors halves for very 22° F. rise in temperature. Because temperatures of the winding cannot be measured accurately in shops, it is recommended that the apparatus be permitted to reach room temperature before insulation resistance is measured.

b. Dielectric test. Once a year, or whenever the insulation of apparatus has been repaired, dielectric tests of not less than 1-minute duration should be made on the main power circuits. It is important that:

(1) The equipment be clean and dry, and checked with a megger before making the test. High voltage should not be applied unless the insulation resistance measures at least 1 megohm when the motors and generators are clean, dry, and cool--about 77° F.

It is considered good practice to insist on 1 megohm or more before applying insulation tests to any electrical machinery. For diesel-electric equipment, the megger reading should be taken over a 30-second period or longer. If the reading is constant or rises steadily with continual application of the megger voltage, the insulation is considered sound and can be safely tested. If the reading is unsteady and rises and falls excessively with steady application of megger voltage, it is likely that leakage paths may be present, caused by dirt or moisture, and further cleaning and drying will be necessary.

(2) The test leads be securely connected to the circuit before power is applied to the test box, to avoid surges from poor connections.

(3) The voltage from the test box be varied smoothly, both when increasing and decreasing the setting, to avoid surges.

c. Test boxes. A test box measures the voltage or amperage of any unit connected to it. When making tests, guard against damaging the test box. Sudden application or removal of test potentials may result in surges as much as 100 percent more than the intended test voltage. Excessively burned contacts or contact tips on the test box may result in undesirable fluctuations in test voltage. Test boxes that have fixed, definite secondary steps of voltage are certain to produce surging if the primary voltage cannot be smoothly controlled from zero to maximum. The most effective and inexpensive modification for test boxes of 1/2 to 5 kilovolt-ampere (kv-a) capacity can be made by adding a Variac (trade name for variable auto-transformer) to the primary winding. A Variac has the capability of varying the voltage smoothly without steps, resulting in practically no surging of voltage. To use a Variac, connect the test leads to the machine or circuit being tested before applying power to the test box, then raise the voltage to the test value with the Variac, hold for the prescribed time, and then lower the voltage to zero with the Variac before removing power and disconnecting the test leads.

2.32. SUMMARY

To operate properly, the generator's armature shaft and frame must be in line with the engine crankshaft, and its airgap space must be equal under each main pole, under each commutating pole, and from front to rear. The generator requires the same maintenance as the motor. Among the things to be inspected in the generator or the motor are the engine starting contactor, field windings and leads, armature, brushes and brush holders, commutator, insulation, and bearing assemblies.

During routine maintenance, cables and wiring are cleaned and painted; coils and armatures are cleaned, dipped, and baked; and main power switches are checked for proper alinement, wear, and burning or pitting. Electrical circuits are tested to insure that connections are all correct. Insulation resistance tests indicate the presence of moisture, dirt, or grease that can cause insulation failures even though nothing is wrong with the insulation.

Clean and lubricate the voltage regulator. Replace worn parts and assure that the regulator is set to manufacturer's specifications. Load regulators also need regular cleaning as well as tightening of connections, and replacing of seals to prevent oil leakage. Care of reversers includes renewing piston packing and adjusting contacts and interlocks. Maintenance of magnet valves is also important.

The battery should be kept clean and dry, and should be blocked to prevent movement. In cold weather, add the battery water just before the locomotive goes into service. The hydrometer reading should vary between 1,280 and 1,160.

Clean the bearings and bearing parts, such as housing, with kerosene or other petroleum cleaner. Inspect and repack the bearings and replace them as necessary. When a bearing is removed, mark it to be replaced in the slot from which it was taken.

Follow manufacturer's instructions closely for testing a locomotive's electrical equipment; do not attempt to make substitutions or to take shortcuts. Test insulation periodically and remedy all defects to avoid failures en route.

Section III. Troubleshooting

2.33. GENERAL

Troubleshooting is a systematic method of locating the cause of trouble. An unserviceable locomotive will be reported for repair with vague complaints about its malfunction, and the repairman will be expected to diagnose the trouble. He soon learns that a certain symptom is caused by one of several things. Then he checks these things to determine which is at fault. This section gives some of the more common malfunctions of the locomotive and lists their likely causes. It is intended to serve only as a general guide, since specifications for each piece of equipment vary. The operator must check his operation and maintenance manual before taking any corrective action. He must report any trouble that he or his crew is not authorized to correct to organizational maintenance.

2.34. FAULTY ENGINE OPERATION

Trouble with the engine's operation can arise from many things. Satisfactory operation depends upon good compression pressure and the injection of the proper amount of fuel at the right time. Loss of compression or faulty injector action can cause lack of engine power, uneven running, excessive vibration, and a tendency to stall when idling. The following troubles, with lists of possible causes and remedies, are given to assist the mechanic in diagnosing engine trouble and correcting it.

a. Refuses to start. If an engine fails to start, it usually means either weak batteries or insufficient air pressure. Loss of compression is often caused by dry pistons and a small amount of oil should be introduced into the cylinders. If the engine still fails to start, check the fuel system for air locks. An air lock in the low pressure pipeline can be cleared by opening the priming valve on the pump; in the high pressure pipeline, by slacking back the delivery pipe union nut at the injector while the engine is turned over a few times.

When poor starting gets worse, it is probably caused by valve trouble and maintenance is the only remedy. At temperatures below 32° F., check cold weather starting aids.

b. Irregular running. Several defects can cause irregular running. Some of these are an engine valve sticking open, dirty atomizers, air in one of the high-pressure injector pipes, a sticky fuel pump delivery valve, and water in the fuel oil.

c. Uneven running and excessive vibration.

(1) Faulty injector timing or rack setting.

(2) Insufficient fuel supply.

(3) Hunting governor. Remove all the bind from injector control rack operating shaft mechanism.

(4) Cooling water temperature too low. Check thermostats.

(5) Valves in bad condition. Check compression pressures.

(6) High exhaust back pressure. Check exhaust pressure at exhaust manifold.

(7) One or more cylinders cutting out. Determine which cylinders are cutting out, check valve springs for the bad cylinder, and replace injector with a new one. Check compression.

(8) Water in fuel system.

d. Stalling.

(1) Idling speed too low.

(2) Cooling water temperature too low.

(3) Too sudden application of load at low speeds.

(4) One or more cylinders cutting out.

(5) Governor is hunting (overcompensating). Remove the bind from injector control rack operating shaft mechanism.

(6) Choked fuel oil filters.

(7) Unsatisfactory injectors. Replace with reconditioned injectors.

(8) Improper governor adjustment and governor linkage incorrectly set.

(9) Air in fuel system. Inspect system for leaks.

e. Loss of power.

(1) Injector racks not properly positioned.

(2) Faulty injector timing.

(3) One or more cylinders cutting out.

(4) Air filters choked.

(5) Insufficient fuel supply.

(6) Choked fuel oil filter.

(7) Air in fuel system.

(8) Unsatisfactory injectors.

(9) Improper governor adjustment.

(10) Loss of compression.

f. Will not shut off.

(1) Gradual development of the condition in normal operation is usually caused by misalinement of external control linkage. When a stop is attempted, the engine continues to run somewhat below idle.

(2) Diluted oil in air boxes and hot engine.

g. Engine knocks (detonates).

(1) Because of the diesel's high compression, its characteristic sound is sometimes mistaken for knocking. To detect true knocking, place a screwdriver or bar against the engine with the other end to the ear, and listen to engine sounds at various positions. Hammering in a diesel can be caused by either fuel or mechanical knocks. If a hard metallic knock indicates detonation in one or more cylinders, the engine should be immediately stopped to prevent serious damage from the excessive pressures accompanying detonation. Detonation is caused by the presence of fuel oil or lubricating oil in the air charge of the cylinders during the compression stroke. The engine should be checked for:

(a) Leaky injectors.

(b) Leaking fuel connections in cylinder head.

(c) Crankcase dilution due to fuel leaks.

(d) Leaky blower housing gasket.

(e) Leaky blower oil seals.

(f) Control rack improperly adjusted.

(g) Hydraulic valve lash adjusters sticking.

(2) Mechanical knocks may be caused by loose or worn pistons, piston pins, bearings, blowby, or loose flywheel. In a two-cycle engine, knocking will be heard from a loose connecting rod bearing because of the downward pressure on the piston both on the upstroke, compression, and on the downstroke, combustion. To isolate connecting rod knocks, hold down on the injector plunger, cutting out injection on the cylinder suspected; then any loose bearing will be heard.

h. Does not turn over.

(1) Battery and control switches open.

(2) Battery or control fuses blown.

(3) Battery weak.

(4) Electric connections poor.

(5) Engine start switch defective.

i. Turns over but does not fire.

(1) Fuel supply exhausted.

(2) Fuel lines broken or fouled.

(3) Fuel lines airbound.

(4) Fuel filter plugged.

(5) Emergency fuel shutoff closed.

(6) Fuel pump not running; check circuit.

j. Stops.

(1) Fuel supply exhausted.

(2) Fuel line broken or fouled.

(3) Fuel filter plugged.

(4) Lubricating oil pressure low.

(5) Engine obstructed. Bar engine over to see that it is not blocked.

(6) Faulty governor or throttle linkage.

(7) Governor inoperative. Check fuel racks.

k. Overspeeds.

(1) Faulty governor.

(2) Improper fuel pump rack setting.

(3) Overspeed trip setting.

l. Overheats.

(1) Water low. Check for leaks; refill.

(2) Radiator plugged.

(3) Lubricating oil not cooling properly.

(4) Fan not operating properly.

(5) Heat exchanger (lubricating oil cooler) plugged.

(6) Shutters closed.

(7) Engine overloaded.

(8) Water hose collapsed. Replace it.

a. Races before picking up load. Main generator field defective. Excitation fails to build up properly.

2.35. LOCOMOTIVE OPERATION

The locomotive:

a. Does not move with engine running and throttle open.

(1) Brakes not released.

(2) Battery and control switches open.

(3) Electric connections poor.

(4) Reverse lever in neutral.

b. Moves very slowly.

(1) Drag too heavy. Cut off cars.

(2) Brakes not fully released.

(3) Main generators not delivering full power.

c. Remains in low speed.

(1) The traction motor not making transition.

(2) All traction motors not operating.

d. Moves with throttle off. Throttle valve stuck open. Close by hand or open control switch and apply brakes.

2.36. TROUBLE DEVELOPS WITH MOTOR

Insure that:

a. Bearings are in good condition.

b. No mechanical obstruction prevents rotation. Shaft turns freely.

c. All bolts and nuts are tightened securely.

d. Correct voltage is actually available at the motor terminals. Voltage drop must not be more than 10 percent of rated voltage.

e. Fuses are good and connections are tight.

f. The brushes make contact with the commutator and do not bind in brush holder.

g. Armature or frame is not grounded; check with a megohm-meter.

2.37. DIRTY EXHAUST

Black smoke will always appear when the engine is greatly accelerated and blue smoke is common on starting. It is necessary, therefore, to run the engine for a while at low speeds and under loads before assessing the exhaust.

Dense black smoke means incomplete combustion of the fuel, perhaps due to overloading of the engine or to a delivery valve at the fuel pump being stuck open and too much fuel entering the cylinder. Grey smoke is caused by bad injection timing or dirty sprayer nozzles. Blue smoke indicates excess lubricating oil burning in the combustion chamber. The excess oil may be due to an overfilled sump or a faulty piston ring.

2.38. BATTERY DOES NOT CHARGE

a. Blown battery or charging generator fuse.

b. Faulty electric circuits.

c. Faulty generator brushes.

2.39. AIR PRESSURE

a. Does not build up.

(1) Main reservoir drain valve open.

(2) Brake pipe angle cock open.

(3) Pilot valve stuck open.

(4) Unloader valve stuck open.

(5) Compressor belts slip or are broken.

(6) Faulty compressor.

b. Builds up slowly.

(1) Long train requires longer time to charge.

(2) Compressor belts slipping.

(3) Unloader valve stuck open.

(4) Broken pipe or loose fittings.

(5) Faulty governor.

2.40. BRAKES

a. Low braking power.

(1) Too much brake cylinder piston travel.

(2) Faulty piston.

(3) Worn brakeshoes.

(4) Low brake cylinder pressure.

(5) Broken brake cylinder pipe.

b. Brakes hold after release application. Brake pipe under-charged or faulty distributing valve.

c. Brakes reapply after regular release.

(1) Brake pipe overcharged. Make partial brake application and return handle to running position.

(2) Faulty feed valve.

d. Brake cylinder pressure too high. Feed valve stuck or distributing valve sticks.

2.41. LUBRICATION

a. Lack of pressure.

(1) Oil supply in crankcase low.

(2) Crankcase oil diluted.

(3) Wear on crankshaft or connecting rod bearings.

(4) Lubricating oil pump relief valve sticking.

(5) Oil cooler choked.

(6) Oil pump screen choked.

(7) Oil pump drive inoperative.

(8) Oil lines choked, improperly tightened, or leaking.

b. High temperature.

(1) High cooling water temperature.

(2) Clogged oil cooler.

(3) Oil cooler bypass not operating.

2.42. SUMMARY

Although locomotive trouble usually shows up in engine operation first, the trouble source often is not in the engine. Troubles in the fuel system, air system, and electrical system affect all phases of locomotive operation and cause the engine to run unevenly or not at all. Improper lubrication and cooling are other common sources of trouble.

Whatever the defect, experience in repair work helps the repairman to locate it.

CORRESPONDENCE COURSE OF THE
U. S. ARMY
TRANSPORTATION SCHOOL

DIESEL-ELECTRIC LOCOMOTIVES

EXAMINATION
TRANS SUBCOURSE 656

Supersedes Trans 656, Diesel-Electric Locomotives, November 1969.

CORRESPONDENCE COURSE OF THE
U.S. ARMY TRANSPORTATION SCHOOL
SOLUTIONS

TRANS SUBCOURSE 656.....Diesel-Electric Locomotives.

(All references are to Reference Text 656.)

LESSON 1

Weight	Exercise	
2	1.	A, true. (par. 1.8a)
2	2.	A, true. (par. 1.5)
2	3.	B, false. (par. 1.4)
2	4.	B, false. (par. 1.6)
4	5.	B, false. (pars. 1.9, 1.11)
4	6.	A, true. (par. 1.11)
4	7.	B, false. (par. 1.12e)
4	8.	A, true. (par. 1.11)
4	9.	A, true. (par. 1.11)
4	10.	A, true. (par. 1.10c)
4	11.	B, false. (par. 1.9b)
4	12.	B, false. (par. 1.10h)
4	13.	A, true. (par. 1.9a)
4	14.	A, true. (par. 1.9c)
4	15.	B, false. (par. 1.3)
4	15.	V, false. (par. 1.3)
4	16.	A, true. (par. 1.3)
4	17.	A, true. (par. 1.3)
4	18.	B, false. (par. 1.3)
4	19.	A, true. (par. 1.3)
4	20.	A. (par. 1.10a)
4	21.	E. (par. 1.5)
4	22.	B. (par. 1.10e)
4	23.	D. (par. 1.6b)
4	24.	A. (par. 1.5)
4	25.	C. (par. 1.9b)
		Independent airbrakes control only the locomotive.
4	26.	B. (par. 1.7)
		Treated water is used because untreated water

All concerned will be careful that neither this solution nor information concerning the same comes into the possession of students or prospective students who have not completed the work to which it pertains.

Supersedes Trans 656, Diesel-Electric Locomotives, November 1969.

Weight	Exercise	
		may cause chemical deposits or corrosion to form, clogging the radiator.
4	27.	A. (par. 1.6)

LESSON 2

Weight	Exercise	
2	1.	B, false. (par. 1.42)
2	2.	A, true. (par. 1.40)
2	3.	B, false. (par. 1.37)
2	4.	A, true. (par. 1.20)
2	5.	A, true. (par. 1.39)
2	6.	B, false. (par. 1.42)
3	7.	B, false. (par. 1.23)
3	8.	A, true. (par. 1.15)
3	9.	A, true. (par. 1.16)
3	10.	A, true. (par. 1.18)
3	11.	A, true. (par. 1.33)
3	12.	B, false. (par. 1.26a)
3	13.	A, true. (par. 1.26)
3	14.	A, true. (par. 1.26b)
3	15.	A, true. (par. 1.26)
3	16.	B, false. (par. 1.25)
3	17.	D. (par. 1.22)
3	18.	A. (par. 1.30)
3	19.	E. (par. 1.31)
3	20.	C. (par. 1.28)
3	21.	B. (par. 1.32)
3	22.	E. (par. 1.32)
3	23.	B. (par. 1.43b)
3	24.	D. (par. 1.41f)
3	25.	A. (par. 1.34d(1)
3	26.	C. (par. 1.43)
3	27.	D. (par. 1.41c)
3	28.	E. (par. 1.41e)
3	29.	B. (par. 1.41a(2))
3	30.	C. (par. 1.41f)
2	31.	A. (par. 1.24)
2	32.	A. (par. 1.34)
2	33.	B. (par. 1.38) Operates by controlling the generator field.

Weight	Exercise	
2	34.	C. (par. 1.21)
		Work is expressed in foot-pounds but the element of time is unimportant. Power is expressed in foot-pounds per second.
2	35.	A. (par. 1.25)
2	36.	A. (par. 1.32)
2	37.	B. (par. 1.34)
		The total resistance is equal to the sum of the resistances in all portions of the circuit.
2	38.	C. (par. 1.26)
		Eddies form excessive heat rather than remove it.

LESSON 3

2	1.	A, true. (par. 2.8a)
2	2.	B, false. (par. 2.3)
2	3.	A, true. (par. 2.7b)
2	4.	A, true. (par. 2.8b)
2	5.	A, true. (par. 2.7)
2	6.	B, false. (par. 2.4c)
2	7.	B, false. (par. 2.10)
2	8.	B, false. (par. 2.9)
4	9.	B, false. (par. 2.5)
4	10.	A, true. (par. 2.14)
4	11.	A, true. (par. 2.3)
4	12.	B, false. (par. 2.4a)

Weight	Exercise	
4	13.	A, true. (par. 2.7a)
5	14.	D. (par. 2.11)
5	15.	B. (par. 2.8)
5	16.	E. (par. 2.13)
4	17.	B. (par. 2.6b)
4	18.	A. (par. 2.14)
4	19.	B. (par. 2.12)
4	20.	A. (par. 2.4b)
4	21.	D. (par. 2.8)
4	22.	C. (par. 2.6a)
5	23.	A. (par. 2.4)
5	24.	A. (par. 2.11)
5	25.	C. (par. 2.15)
		A water box is seldom used because of the danger of electrocution.
5	26.	B. (par. 2.11)
		Unusually high pressure may give unreliable readings. Slow movement of the lever keeps pressure low.
5	27.	C. (par. 2.7b)
		Oil should not be less than 70° F.

LESSON 4

Weight	Exercise	
1	1.	A, true. (par. 2.19g(4))
1	2.	A, true. (par. 2.21)
1	3.	B, false. (par. 2.20)
1	4.	A, true. (par. 2.31)
2	5.	B, false. (par. 2.19b)
2	6.	B, false. (par. 2.19a)
2	7.	A, true. (par. 2.19c)
2	8.	A, true. (par. 2.19e)
2	9.	A, true. (par. 2.19c)
2	10.	B, false. (par. 2.19a)
3	11.	A, true. (par. 2.20)
3	12.	A, true. (par. 2.20)
3	13.	A, true. (par. 2.20)
3	14.	B, false. (par. 2.20)
3	15.	B, false. (par. 2.20)
3	16.	A, true. (par. 2.25)
3	17.	B, false. (par. 2.25)
3	18.	B, false. (par. 2.25)
3	19.	A, true. (par. 2.25)
3	20.	A, true. (par. 2.25)
3	21.	D. (par. 2.19h)
3	22.	A. (par. 2.19d)
3	23.	E. (par. 2.28)
3	24.	C. (par. 2.27a)
3	25.	B. (par. 2.24)
3	26.	C. (par. 2.29)
3	27.	E. (par. 2.27a)
3	28.	D. (par. 2.26)
3	29.	D. (par. 2.22)
3	30.	B. (par. 2.21)
3	31.	D. (par. 2.40a(2))
3	32.	A. (par. 2.34c(1))
3	33.	B. (par. 2.31a)
3	34.	D. (par. 2.19i(1))
2	35.	A. (par. 2.18a)
2	36.	B. (par. 2.19f)
		Extra material on the winding does not increase heat transfer; it decreases it.
2	37.	C. (par. 2.28d)
		Water should not be added to the battery until just before the locomotive goes into service.

Weight	Exercise	
2	38.	A. (par. 2.19i(3))
2	39.	C. (par. 2.31a) Low insulation resistance is not desirable; it always indicates low dielectric strength.
2	40.	B. (par. 2.19b) A liquid cleaner cleans well enough but may cause them to crack.

Appendix I

REFERENCES

Army Regulations

AR 310-25	Dictionary of United States Army Terms
AR 310-50	Authorized Abbreviations and Brevity Codes

Technical Manuals

TM 55-202	Operation and Maintenance of Diesel-Electric Locomotives
TM 55-1263	Locomotive, Diesel-Electric, 56 1/2" Gage, 65-Ton 0-4-4-0, 400 hp, General Electric, Cummins Engine Model HBIS-600
TM 55-1271-1	Locomotive, Diesel-Electric, 56 1/2-in, 60-in, 66-in Gages, 120-Ton, 0-6-6-0, 1600 hp, Electromotive Models MRS-1, SW8, GP7L (TO 58-5AA-17)

Other Publications

Diesel-Electrics - How to Keep "Em Rolling," Simmons, Boardman Publishing Corp., New York, N. Y.

Appendix II

GLOSSARY

Airbrake--system of braking in which the braking mechanism is actuated by air pressure.

Airgap--air-filled gap in a magnetic or electric circuit in a dynamo or motor; the space between the field magnetic poles and the armature.

Alternating current--electrical power system in which the electrical current flow goes first in one direction then the other, giving rise to the term "alternating."

Ampere--unit which indicates the rate of flow of electric current.

Arc--the visible flow of electric current between conducting pieces separated by air or other gases.

Armature--usually refers to the rotating part of a direct current generator or motor; also that part of a contactor or relay caused to move by magnetic force.

Atmospheric pressure--pressure of the atmosphere measured from absolute zero pressure. At sea level atmospheric pressure is about 14.7 pounds per square inch, decreasing as the altitude increases.

Auxiliary generator--generator of electric power to be used for driving the auxiliary equipment of diesel motive power.

Axle--shaft of wrought iron or steel to which a pair of wheels is attached by pressing on with a hydraulic wheel press.

Babbitt metal--alloy, consisting mainly of tin and copper, largely used for journal box bearings; so called after its inventor, Isaac Babbitt. Any white alloy for bearings, as distinguished from the metals, or brasses, in which copper predominates.

Bands--wrapping of high tensile strength wire around the armature of a generator or motor to hold the coils or other parts in place against the centrifugal forces of rotation.

Brakeshoe--cast-iron piece held against a wheel to produce braking.

Brush--device used for pressing against a rotating part of a generator or motor in order to pass current from the stationary to the rotating portions, or vice versa. Usually made of carbon, or graphite.

Burning--commonly substituted for combusion; for example, late burning means late or slow combustion.

Bushing--lining for a hole. Usually a metal cylindrical ring which forms a bearing for some other object as a shaft, valve, etc., inserted into the hole. Often contracted to bush.

Bypass--form of valve manually or automatically controlled which, when open, permits a fluid to pass around some part of a mechanism.

Cam--wheellike disk attached to a shaft. Only a portion is circular, the remainder protruding beyond the circle. From the irregularity or the contour of the cam, corresponding motion is imparted to a valve by means of a lifter, push rod, and rocker arm.

Camshaft--shaft which carries the various cams required for the operation of intake and exhaust valves.

Carbon--one of the nonmetallic elements. In a prepared form, it may be a brush or electrode.

Carbon pile--group of carbon disks so arranged that by compressing a stack of these disks, the electrical resistance from one end of the stack to the other is reduced. When the pressure on the stack is reduced, the resistance rises. One means of obtaining a variable resistance.

Circuit--course followed by an electric current passing from its source through a succession of conductors and then returning to its place of origin.

Clearance--space provided between moving parts or between a moving part and a fixed part of objects.

Clearance volume--volume of air space remaining in the cylinder when the piston has reached the end of its upward or compression stroke.

Coil--successive turns of insulated wire which create a magnetic field when an electric current passes through.

Combustion--result of the combination of a combustible with oxygen. The process is usually initiated by heat and produces heat. (See Burning.)

Combustion chamber--compartment in a locomotive cylinder where combustion occurs.

Combustion knock--explosion that occurs when a cylinder is filled with fuel before ignition begins.

Commutating field--auxiliary flux developed at the point where the armature coils are short circuited by the brush. Used to eliminate excessive sparking by helping reverse the current in each short-circuited coil.

Commutating pole--steel pole piece with a coil for producing a commutating magnetic field.

Commutator--device used to reverse the direction of electric currents in any circuit.

Compound field winding--combination of series, shunt, and/or separately excited field coils for magnetizing a field pole.

Compression--pressure produced within a cylinder as the piston moves from bottom to top center with all valves closed.

Compression ignition--ignition of a fuel charge by the heat generated by compression of the air in a cylinder.

Compressor governor--device used to regulate the point at which an air compressor cuts in (loading point) and when it cuts off (unloading point).

Conductor--any device, wire, bar, or material which readily conducts electrical current.

Contactor--device for making or breaking an electrical circuit and usually actuated by the pull of magnetism. In its usual form, it consists of a stationary coil surrounding a steel core and an armature moved by magnetism of the core whenever an electric current flows through the coil. The armature carries a moving contact piece which strikes and completes an electrical circuit

through a stationary contact piece. While a relay may accomplish this same function similarly, the term contactor is usually applied where the currents passing through the contact pieces are of appreciable values.

Controller--device, usually manually operated, by which the operator of a locomotive can increase or decrease the applied power, make transition, and determine direction.

Crankcase--lower part of the engine structure in which the crankshaft is mounted.

Crankpin--that part of the crankshaft that is offset to carry the connecting rod.

Crankshaft--shaft that extends through the length of the engine to which is attached the connecting rods and which gathers the power and delivers it to the flywheel.

Cumulative field winding--on a single magnetic circuit encircled by series, shunt, and/or separately excited coils, if all coils tend to magnetize the circuit in the same direction, the windings are said to be cumulative.

Current--flow of electric energy in a circuit. (See Ampere.)

Cycle--complete series of events which occur until the original positions of all moving parts are restored and recurrence starts. In the four-stroke-cycle engine, this requires four strokes of the piston, hence the designation; in the two-stroke-cycle engine, only two strokes are needed to complete the cycle.

Cylinder--cylindrical part of an engine in which the piston moves.

Cylinder cock--small cock screwed into a cylinder to allow any accumulation of water in the cylinder to escape.

Cylinder head--part which covers and seals the end of a cylinder and usually contains the valves.

Differential control--system of control whereby the loading of the diesel engine is regulated by a differential field winding applied to the main generator or to the exciter of the main generator.

Differential field winding--in a combination of series, shunt, and/or separately excited field coils, an arrangement such as one tending to magnetize the field pole in a direction opposite to the magnetization of the others.

Direct current--electrical power system in which the electrical current flow is continuously in the same direction.

Drum--cylindrical device carrying contact plates and so arranged that by its rotation circuit changes are made.

Dynamo--machine used to generate electricity or force; can be either a motor or a generator.

Eddy current--local circulating current generated in conductors or machine structures, usually serving no useful purpose.

End windings--that portion of the armature coils of a generator or motor which extends beyond the armature iron at either end.

Energize--to apply electrical voltage to a circuit, coil, or other device.

Engine--mechanism for converting the energy in steam, air, or other gas under pressure into mechanical energy in the form of motion. Usually restricted to reciprocating engines having a cylinder, reciprocating piston, and means for causing the gas under pressure to expand alternately on each side of the piston, moving it back and forth in the cylinder. Frequently used as meaning the entire locomotive.

Equalizer--beam connected at each end to a driving or truck spring, or the end of another similar beam, for the purpose of distributing the weight of an engine to two or more axles, and to prevent an excessive load being thrown upon one axle by reason of inequalities of the track or roadbed. Also known as equalizing lever or beam, or equal beam.

Excite--to pass current through a coil for the purpose of creating a magnetic field.

Exciter--generator especially designed to produce the electric current required for exciting another generator.

Exhaust pyrometer--instrument to measure temperature of the exhaust by the electrical energy developed at the junction of two dissimilar metals when exposed to heat.

Expansion period--portion of the power stroke during which the combustion gases exert pressure on the moving piston and expand while the pressure falls.

Field--region where magnetic forces act; also known as the magnetic field.

Foot-pounds (ft-lb)--units in which work is measured; equivalent to the work of raising 1 pound vertically a distance of 1 foot or of moving an object 1 foot against a resistance of 1 pound.

Four-stroke cycle--engine in which the intake, compression, power, and exhaust events are completed with four strokes of the piston. In a normal engine, this is accomplished within two revolutions of the crankshaft.

Fulcrum--in mechanics, that by which a lever is sustained or the point on which it moves.

Fuse--fusible link connected in a circuit so that when an excessive current flows, the link will melt and break the electrical circuit.

Generator--machine that transforms mechanical energy into electrical energy.

Governor--on an engine, a device whereby the speed is held approximately constant regardless of the load or is kept from exceeding a set predetermined speed within the limits of the engine, brought about by the governor altering the amount of fuel introduced into the cylinder.

Ground--connection from an electrical circuit to a grounded part.

Heat balance--tabulation showing the percentage of the heat developed by combustion in an engine cylinder, that is: delivered in the form of power at the crankshaft; lost in friction; lost to the cooling water; lost in the exhaust gases and radiation.

Horsepower--rate of doing work expressed in terms of 33,000 foot-pounds per minute. This means if a weight of 33,000 pounds was raised 1 foot in 1 minute there would have been one

horsepower of work done, or if 1 pound was raised 33,000 feet in 1 minute, it would also be one horsepower.

Inertia--resistance of a body to motion or change in velocity.

Injection pump--a pump used to inject fuel into the injector.

Injector--mechanism that inserts fuel into the combustion chamber.

Insulation--material which does not readily pass electric current. An assembly of materials and devices for insulating a circuit.

Interlock--secondary electrical contact-making or contact-breaking device applied to a contactor or switch for altering the control circuits depending upon whether the switch is open or closed.

Interpole--commutating pole.

Journal--in reference to a crankshaft, that part resting in the main bearing shells.

Journal bearing--block of metal, usually some kind of brass or bronze, which is in contact with a journal on which the load rests. In locomotive building, usually means an engine or truck axle journal bearing.

Journal box--castiron, malleable iron, or cast steel box which encloses the journal of a truck axle and the journal bearing and key, and which holds the packing for lubricating the journal. Also called axle box, grease box, housing box, oil box, and pedestal box, or, simply, box.

Jumper--removable electrical connector usually used for bypassing a portion of an electrical circuit. Also a device used between units of a train for coupling or uncoupling electrical circuits carried from unit to unit.

Kilowatt--unit of power; 1,000 watts; 1.34 horsepower.

Knife switch--switch consisting of one or more bare hinged blades, making contact edgewise with stationary jaws.

Lateral motion--movement sidewise; in railroading, a side or swing motion of the bolster of a swing bolster truck, as opposed to the end play of an axle under the journal.

Lead--conductor leading current to or from an electrical device. Usually applied to flexible wire, cable, etc.

Liner--inner removable part of a cylinder in contact with the piston.

Load--a term indicating output of the engine.

Load control--system of control whereby the loading of a diesel engine is regulated by the speed of the engine itself, this speed reflecting the load conditions of the engine.

Lubrication--use of oil, grease, or other substance between moving parts of machinery for reducing friction, resistance, and heating caused by motion of the parts in contact.

Lubricator--any device, as an oil cup or grease cup, for holding a lubricant and supplying it to wearing surfaces.

Magnetic field--normally the region where magnetic forces are acting.

Magnetic flux--average field intensity of a magnet, multiplied by its area.

Magnetic line of force--invisible line indicating the direction of action of a magnetic force.

Mean--another way of saying average. The mean effective pressure of any engine is the average pressure in the cylinder during the power stroke, for example.

Mechanical efficiency--ratio of useful work performed by a machine to the energy expended in producing this work.

Mechanical injection--same as airless injection; an injection system of a diesel engine that does not use air as a means of carrying the fuel into the combustion chamber.

Megger--instrument used for the measurement of insulation resistance. Since such resistance to the passage of electric current is generally in the range of millions of ohms (megohms) the instrument derives its name therefrom.

Megohm--large unit of resistance; a million ohms.

Motor--an electrical machine having electrical conductors rotating past magnetic poles so that electrical energy may be converted into mechanical energy.

Muffler--sometimes referred to as silencer; used to diminish noise of either the intake or the exhaust.

Multiple--as pertaining to electricity, designating a circuit having a number of conductors in parallel. As applied to engines, the operation of more than one motive power unit simultaneously by one operator.

Needle valve--rod consisting of a long fine point to its spindle, the point just fitting into a hole which its motion opens or closes. Needle valves are designed for standard working pressures to control air, gas, gasoline, or other liquids requiring close regulation.

Negative--usually considered the relative potential toward which electric current flows.

Neutral--that zone on the commutator of a generator or motor where the voltage between bars is at minimum. This zone is normally stationary in respect to the field poles even though the commutator is rotating.

Nitrogen--gas that makes up approximately four-fifths of the atmospheric air.

Nozzle--device containing one or more small openings through which liquids or gases are ejected under pressure.

Ohm--unit of electric resistance. An electric conductor is said to have a resistance of one ohm if a current of one ampere flows when one volt is impressed across the conductor.

Ohm's law--relationship between voltage, resistance, and current formulated by Ohm: $I = \frac{E}{R}$.

Overload--excess of current in a circuit, prevented by fuses and circuit breakers.

Oxygen--ordorless, colorless, tasteless gas which makes up 20 percent of the atmosphere and is necessary to support life and combustion.

Packing--material used to seal a joint against leakage or as a method to apply lubricant to a bearing or bearings.

Parallel--side by side. A method of connecting an electric system in which all of the positive poles or terminals are connected to one conductor and all of the negative poles to another conductor.

Piston--cylindrical part of an engine which reciprocates in the cylinder bore and transmits the force exerted upon its crown to the connecting rod and crank.

Piston crown--the top of the piston.

Piston pin--pin which rests in two bored holes in the piston and passes through the eye of the connecting rod to join the two together flexibly.

Piston pin bearing--bearing either in the eye of the connecting rod or in the bored bosses of the piston in which the piston pin oscillates.

Piston rings--rings of cast iron, which float in grooves of the piston, to seal against gas leakage between the piston and cylinder barrel.

Plunger--piston of a pump, such as a fuel injection pump.

Pole--usually a projection of steel provided with a coil for producing magnetism in a motor or generator; a conductor or lead of a circuit acted upon by a switch.

Pole piece--steel portion of a magnetic pole.

Positive--usually considered the relative potential from which electric current flows.

Pressure charging--method of putting more air and more fuel into the cylinder--increasing the engine's power.

Receptacle--usually a stationary device housing electric terminals so arranged that electric connections may be made to these terminals by inserting a plug or jumper head. Normally used for connecting external circuits to a locomotive or rail car for battery charging or for multiple operation of motive power units.

Regulator--automatic or hand-operated device whose function is to regulate the voltage of a circuit or the output of a given machine, or to maintain other conditions within prescribed limits.

Relay--electric device which operates under one set of predetermined electric conditions in other parts of the circuit or other electric circuits. Relays may be of various types, the title usually being indicative of their functions, such as voltage relay, reverse current relay, transition relay, overload relay, regulating relay, etc.

Relief valve--valve, similar to a safety valve, that opens at a predetermined pressure.

Residual magnetism--magnetic effect retained by iron or steel after the magnetizing force used to magnetize the metal is removed.

Resistance--property of a conductor or material which opposes the flow of current when voltage is applied and which converts electric energy into heat. The unit of resistance is the ohm.

Resistor--assembly of conductors having relatively high resistance characteristics built to connect in a circuit as desired to limit or control the current flow.

Reverser--control device, usually of the drum type, used for altering the electric connections of traction motors to obtain reverse movement of a motive power unit.

Rheostat--resistor arranged for convenient variation of the resistance value.

Ring grooves--grooves cut in a piston to hold the piston rings.

Rod, connecting--rod which transmits the reciprocating motion of a piston to the circular motion of a crank.

Rpm--revolutions per minute.

Sand box--receptacle for carrying sand to be used to prevent slipping of the driving wheels; operated by a pneumatic sander which allows sand to run through the sand pipes to the rail in front of the drivers; located beneath the running boards or under the engine hood.

Saturation--total amount of magnetic force that can be permanently imparted to the core of a magnet.

Scavenging--exhaust of burned gases after combustion.

Seal--any method used to prevent leakage.

Series circuit--connection of two or more pieces of electric apparatus in succession so that the flow of current is first through one and then through the others in turn. For instance, if two motors are connected in series with a source of power, current flows through No. 1 motor and then through No. 2 motor before returning to its source.

Series field--field winding connected in series with the armature of the machine itself or in series with the armature of a main generator.

Series motor--type of motor in which the field coils are connected in series with the motor armature. This motor is self-protecting to some extent since a rise in current through the armature is accompanied by the same rise in the field. Since motor torque depends upon armature current and field strength, a relatively small rise in current results in a large increase in torque.

Shaft--moving member of an engine, supported by bearings and intended to transmit rotary motion.

Short-circuit--to short a circuit means to introduce a relatively low resistance path in place of the normal higher resistance path. A short circuit usually refers to an accidental and possibly a damaging bypassing of such normal circuit resistance.

Short field--arrangement of a traction motor field whereby the number of turns connected in the circuit may be reduced to weaken the field strength; tends to increase the motor speed.

Shunt--(1) device for diverting a portion of the current from a part of an electric circuit. (2) piece of electric apparatus used in connection with a meter or instrument so that the main current passes through the shunt with only a small portion passing through the meteror instrument. (3) to shunt a portion of an electric circuit means to shunt around it; usually applied to the field of a traction motor.

Shunt field--field of a motor or generator energized by being connected directly between the positive and the negative terminals of the machine.

Shunted field--field around which a shunt has been connected to divert a portion of the current normally passing through the field; usually for the purpose of increasing traction motor speed.

Skirt, piston--lower cylindrical portion of a piston.

Sludge--tarlike formation in oil resulting from mixing of oxidized oil with water and dirt.

Solenoid--electric coil, usually of many turns, used for the generation of a magnetic flux.

Specific gravity--(1) weight of solid or liquid as compared with equal volume of pure water at 62° F. (2) weight of a gas as compared with equal volume of air under the same condition.

Steam generator--small boiler used to convert water to low-pressure steam for heating purposes.

Steel--compound of iron usually with small quantities of silicon and manganese and containing between 1/2 and 3 percent carbon. Steel, unlike wrought iron, can be tempered and retains magnetism. Its malleability decreases and fusibility increases with an increase in carbon.

Stroke, piston--distance that a piston moves from one end of its path to the other end.

Supercharging, or pressure charging--supplying of combustion air to an engine at higher than atmospheric pressure; usually 3 to 5 pounds per square inch but as high as 30 pounds in some types of engines.

Switch--device for opening and closing an electric circuit. Its name usually describes its construction or purpose, such as knife, toggle, pneumatic, magnetic, battery, cutout, or selector switch.

Tachometer--instrument for indicating rotative speed in terms of revolutions per minute.

Thermal efficiency--ratio of heat transformed into work to the total heat supplied.

Thermocouple--strips of dissimilar metals joined, usually welded, at one end. When heated at the joint, a small amount of

electrical energy is generated in proportion to the temperature, and these currents, when measured by a millivoltmeter with its scale graduated in degrees, indicate temperature.

Thermostat--control mechanism whose operation is dependent upon the expansion of heated metal or fluid which is converted into movement and force. This in turn actuates devices that control electric circuits, valves, etc., and can be set to operate at definite temperatures.

Throttle--mechanism used on a diesel-electric locomotive in conjunction with the governor which determines the amount of fuel injected into the cylinders and the power and speed developed.

Torque--usually expressed in foot-pounds, torque is the twisting or turning force developed by the rotating shaft of an engine or motor. The pressure or twisting force of a wrench on a nut is also called torque and is expressed in foot-pounds.

Torque control--first system of load control wherein the engine is loaded to its full permissible torque by gaging the rise or fall in engine speed. A control generator reflects engine speed and causes a load regulator to operate to increase the electrical load if the engine speed is high and vice versa.

Traction motor--electric motor that drives an individual axle of a locomotive.

Tractive effort--expressed in pounds, it is the horizontal power or pull that a locomotive can exert if the wheels do not slip.

Tractive force--force exerted at the rims of the driving wheels of a motive power unit for propulsion.

Tractive power--power developed at the rims of the drivers of a motive power unit. Frequently misused to mean tractive force. Tractive power involves both traction and speed, whereas tractive force may be independent of speed.

Trainline--electric circuits passing from one vehicle to another of a train.

Transfer pump--any pump employed to transfer liquids from one area to another.

Transition--change from one system of electric connections to another. Usually applied to the change from series connection of traction motors to parallel connection.

Truck--metal frame carrying journal boxes and supported on one or more pairs of wheels with their axles, mounted under a locomotive, and carrying part of the weight of the locomotive. With the exception of a few designs of rigid trailing trucks, all trucks are made to turn about a central pivot or to allow for side displacement to enable the locomotive to round sharp curves.

Two cycle (properly two-stroke cycle)--engine operating method utilizing a regularly repeated series, or cycle, of events, each cycle completed in two strokes of the piston, providing a power impulse per cylinder for each shaft revolution. One stroke includes the last part of the scavenging and all of the compression phases; the other, expansion, exhaust, and the early part of the scavenging period.

Unit switch--pneumatically operated switch for use in the main power circuits of railway vehicles.

Valve, spray--valve which sprays the fuel charge injected into the engine cylinder.

Vanes--baffles employed to deflect currents of air or gas.

Viscosity--resistance to flow, measured by a number of systems (Saybolt-Furol, Saybolt-Universal, Engler, etc.) and rated by the number of seconds required for a definite quantity to flow through a standard orifice under stated test conditions.

Viscosity index--number given to a certain lubricating oil to indicate the oil's performance under certain temperature variations.

Volt--unit used in measuring electric pressure.

Waste--threads of wool, cotton, and vegetable fiber used to hold lubricating oil and to come in contact with parts to be lubricated; sometimes called packing or dope.

Water jacket--outer metalic casting forming a space around cylinder liners to permit the passage of water for cooling purposes.

Watt--unit of electric power; equals one volt multiplied by one ampere. To determine the power of a circuit, multiply the volts across the circuit by the amperes flowing (in direct current circuits). 746 watts equals one horsepower.

Wheel--circular disk, mounted on an axle, serving to support a moving vehicle. Wheels used on railroad equipment are sometimes made of chilled cast iron but more commonly of wrought steel.

Wheel flange--projecting edge or rim of the periphery of a wheel for keeping it on the rail.

INDEX

	Paragraph	Page
Air filter	2.14	63
Air gap	2.18	67
Air pressure faults	2.39	97
Air reservoir	1.6	10
Air system	2.14	63
Airbrakes	1.9, 1.39	14, 40
Airbrake equipment	1.10	15
Alining		
air gap	2.18a	67
coupling	2.18b q	67
shafts	2.6	54
Alternating current	1.26	28
Alternator	1.26	28
American Standards Association	1.19	22
Ammeter	1.22, 2.21	25, 77
Ampere	1.14	20
Angular misalinement	2.6	54
Armature	1.25, 1.26	27, 28
Atmospheric pressure	1.5	9
Auxiliary generator	1.27a, 1.43	31, 44
Auxiliary power system	1.43	44
Axle bearings	2.4	49
Axle gears	2.19	68
Axles	1.11, 2.7	16, 55
Babbitt metal	2.4	49
Banding	2.19	68
Banding machine	2.19c	68
Battery	2,28	44, 85
faults	2.38	97
Bearing alinement	2.19	68
clearance	2.4	49
shells	2.4	49
Bearings	2.4, 2.29	49, 86
assemblies	2.19g	74
Bedplate (oil pan)	1.3	5
Bell	1.12	17
Belt tension	2.5	53
Brake cutout cocks	1.10a	15
Brakes	2.8	57
air	1.9	14
dynamic	1.39	41
faulty	2.40	98

	Paragraph	Page
Brakeshoe	1.9	14
Brushes	1.26	28
commutator	2.23	77
Bushings	2.8	57
Bypass, electrical	1.22	25
Cab heaters	1.12	17
Cam	1.4	7
Camshaft	1.4	7
Circuit	1.14, 1.34, 1.38	20, 36, 40
breaker	1.24	27
Closed circuit	1.18	22
Coils	1.25, 1.26, 2.21	27, 28, 77
Combustion	1.4	7
Combustion chamber	1.6	9
knock	1.5	9
Commutator	1.26a, 2.19c, 2.23	29, 68, 77
Compression	1.4, 1.5	7, 9
Compression ignition	1.2	3
Compressor	1.5	9
Compressor governor	1.9	14
Conductor	1.9	14
Connecting-gear ratio	1.27	31
Connecting rod	1.3, 1.4, 2.3	5, 7, 48
Contactors	1.34	36
Contacts	2.19	68
Contamination of oil	1.8	13
Control switch	1.41	42
Conversion, of heat into fuel	1.2	3
Cooling system	1.7, 2.13	12, 63
oil	1.8	13
water	1.7, 1.12	12, 17
Corrosion inhibitor	2.13	63
Crankshaft	1.4	7
Current	1.22	25
Cutout cock	1.10a	15
Cutout switch	1.33	35
Cylinder	2.8	57
arrangement	1.3	5
block	1.3	5
Deadman control	1.9	14

	Paragraph	Page
Depot maintenance	2.1	47
Detergent oil	2.12	61
Dielectric test	2.31b	88
Differential field	1.30	34
Dipping and baking	2.22	77
Dipping insulation	2.19	68
Direct current	1.26	28
Direct support maintenance	2.1	47
Doubleheading	1.42	44
Dynamic braking	1.39	41
Dynamo	1.25	27
Eddy current	1.26	28
Electric drive	1.34	36
Electric system	1.14	20
Electrical symbols	1.19	22
Electromagnet	1.27	31
Electromotive force	1.26	28
Engine	1.2-1.13	3-19
Engine heaters	1.12	17
Engine operation, faulty	2.34	91
Engine starting contactor	2.19a	68
Exciter	1.28, 1.30	32, 34
Exhaust stroke	1.4	7
Exhaust valve	1.4	7
Field coils	1.25	27
Field excitation	1.25	27
Filters, fuel	1.26	28
oil	1.8	13
Fleming's left-hand motor rule	1.25	27
Flushing oil	2.12	61
Foot-pounds	1.21	25
Four-stroke cycle	1.4	7
Fuel		
filters	1.6	10
pump	1.6, 2.10	10, 59
system	1.6	10
tank	1.6	10
Gear ratio	1.27c	32
Generator	1.26, 1.27, 1.28, 2.19	28, 31, 32, 18
brushes and brush holders	2.19d	71
field windings and leads	2.19b	68
lining up	2.18	67

	Paragraph	Page
Ground	1.34	36
Ground relay	1.34	36
Growler test	2.21	77
Heaters	1.12	17
Horn	1.12	17
Hydrocarbon	2.8	57
Injection nozzle	2.11	60
Injector	1.4, 1.6	7,9
Insulation	2.19, 2.19f	68,72
testing	2.31	88
Insulator	1.14	20
Intake stroke	1.4	7
Intake valve	1.4	7
Intercooler	2.14	63
Interlocks	1.34, 1.36,	36,40
	2.30	87
Interpoles	1.26	28
Journal box bearing	2.7	55
Journals	1.11	16
Kilowatt output	1.28	32
Kinetic energy	1.21	25
Knife switch	1.8	13
Laminated core	1.26	28
Leaf	2.31	88
Leakage of electricity	2.23	77
Liquid rheostat	2.15	65
Load control	1.31	35
Load regulator	1.31, 2.26	35,82
Louvers	1.7	12
Lubricating system	2.12	61
Lubrication	1.8	13
faults	2.41	98
Magnet Valve	1.34	36
Magnetic field	1.25	27
Magnetic line of force	1.26	28
Main power switches	2.24	79
Measuring cylinders	2.10	59
Megger	1.14	20
Megohm	1.14	20
Micrometer	2.4	49
Motor	1.25, 2.19	27,68
Multiple-unit operation	1.42	44
Neutral point	1.26	28
Nozzle	2.11	60

	Paragraph	Page
Ohm	1.14, 1.16	20
Ohm's law	1.18	22
Oil filters	1.8	13
Oil system	1.8	13
Operating sequence	2.30	87
Organizational maintenance	2.1	47
Orifice test	2.14	63
Overload	1.24	27
Oxidation	1.8a	13
Oxygen	1.5	9
Packing	2.7, 2.8	55,57
Parallel circuit	1.34	36
Parallel paths	1.26	28
Pedestals	1.3	5
Pinion gears	2.19	68
Piston	1.3, 2.3	5,48
crown	1.3, 2.3	5,48
lubrication	2.8	57
pin	1.3, 2.3	5,48
pin bearing	1.3, 2.3	5,48
rings	1.3, 2.3	5,48
Plunger	1.6	9
Pneumatic throttle	1.4	7
Pole	1.26	28
Pole piece	1.26	28
Potential energy	1.21	25
Power relay	1.27	31
Power unit	1.27a	31
Pressure charging	1.5	9
Pulley alinement	2.5	53
Pump, fuel	1.6	9
Pyrometer	2.15	65
Radial misalinement	2.6	54
Radiator	1.7	12
Regulator	1.31	35
Relay	1.29, 1.34 2.30	33,36, 87
Relay of power	1.27	31
Relay-type voltage regulator	2.25	80
Release spring	2.8	57
Repacking journals	2.7	55
Resistance tests	2.31a	88
Reverse lever	1.41	42

	Paragraph	Page
Reverser	1.32, 2.27	35, 82
Rheostat	1.12	17
Rod, connecting	1.3	5
Rotary switch	1.33	35
Rotary valves	2.8	57
Rotor	1.25	27
Sand box	1.12	17
Sanders	2.9	59
Sanding system	1.12	17
Scavenging	1.4	7
Schematic diagram	1.20	22
Seals, oil	2.26	82
Sequence testing	2.30	87
Series circuit	1.26, 1.34	28, 36
Series field	1.26	28
Series motor	1.29	33
Series-parallel circuit	1.34	36
Shaft	2.6	54
Shims	2.18	67
Short circuit	1.23	26
Shunt	1.22, 1.29,	25, 33
	1.38	40
Slack adjuster	1.9	14
Slip rings	1.26	28
Speed recorder	1.12	17
Stator	1.25	27
Strainer	2.8	57
Stroke, piston	1.2, 1.4	3, 7
Supercharging	1.5	9
Swan neck pipe	2.10	59
Switches, main power	2.24	79
Symbols, electrical	1.19	22
Temperature controls	1.12	17
Test boxes	2.31c	89
Throttle	1.34, 1.41	36, 42
Toggle switch	1.33	35
Traction motor	1.25, 1.26,	27, 28,
	1.29, 1.33,	33, 35
	1.38	40
axle and pinion gears	2.19i	74
axle bearings	2.19b	68
pinion gears, replacing	2.19i	74
transition	1.38, 1.41,	40, 42
	2.30	87

	Paragraph	Page
Transition	1.38, 1.41	40, 42
forestalling switch	1.41	42
lever	1.41	42
Transmission	1.27	31
Troubleshooting		
battery	2.38	97
engine	2.34	91
locomotive operation	2.35	95
motor	2.36	96
Trucks	1.11, 2.7	16, 55
Turbine, gas	1.5	9
Turnbuckle adjustment	2.8	57
Two cycle	1.2	3
V-belt	2.5	53
Valve seats, grinding	2.27b	84
Variac	2.31c	89
Voltage	1.15	20
regulation	1.43	44
regulator	1.43, 2.25	44, 80
Voltmeter	1.23	26
Volts	1.14, 1.23,	20, 26
	1.44	45
Water box	2.15	65
Water jacket	1.3, 1.7	5, 12
Wheel mounting	2.7	55
Wheel-slip relay	1.34	36
Wheels	2.7	55
Window wipers	1.12	17
Wiring	1.24, 2.20	27, 76